SolidGround™ Transformer Neutral Blocking System

Presentation to
2013 PowerWorld
Client Conference
January 22, 2013

Power World Grid Modeling with GIC and Neutral Blocking

emPRIMUS™
PROTECTION RATHER THAN RECOVERY

Agenda

- GMD Threats to the Power Grid
- Estimated 100 Year Geo-Electric Field Magnitudes
- Geomagnetically Induced Current (GIC) Grid Modeling
- SolidGround™ Transformer Neutral Blocking System
- System testing at KEMA and the Idaho National Laboratories (INL)
- SolidGround™ Economics

Geomagnetic disturbance is in the mainstream media

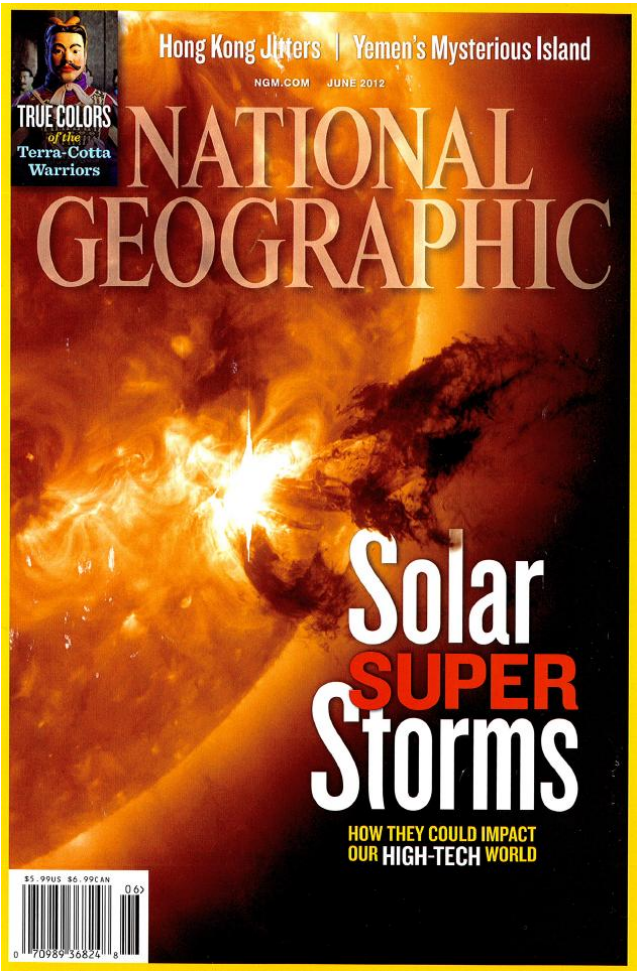

June 2012

"Most power grids have no built-in protection against the onslaught of a powerful geomagnetic storm."

"Scientists cannot be sure of the storm's intensity until it reaches the ACE satellite – sometimes a mere 20 minutes before it slams into Earth."

"The morally right thing to do once you've identified a threat of this magnitude is to be prepared… Not preparing for it has intolerable consequences."

Solar Storms Damage the Power Grid

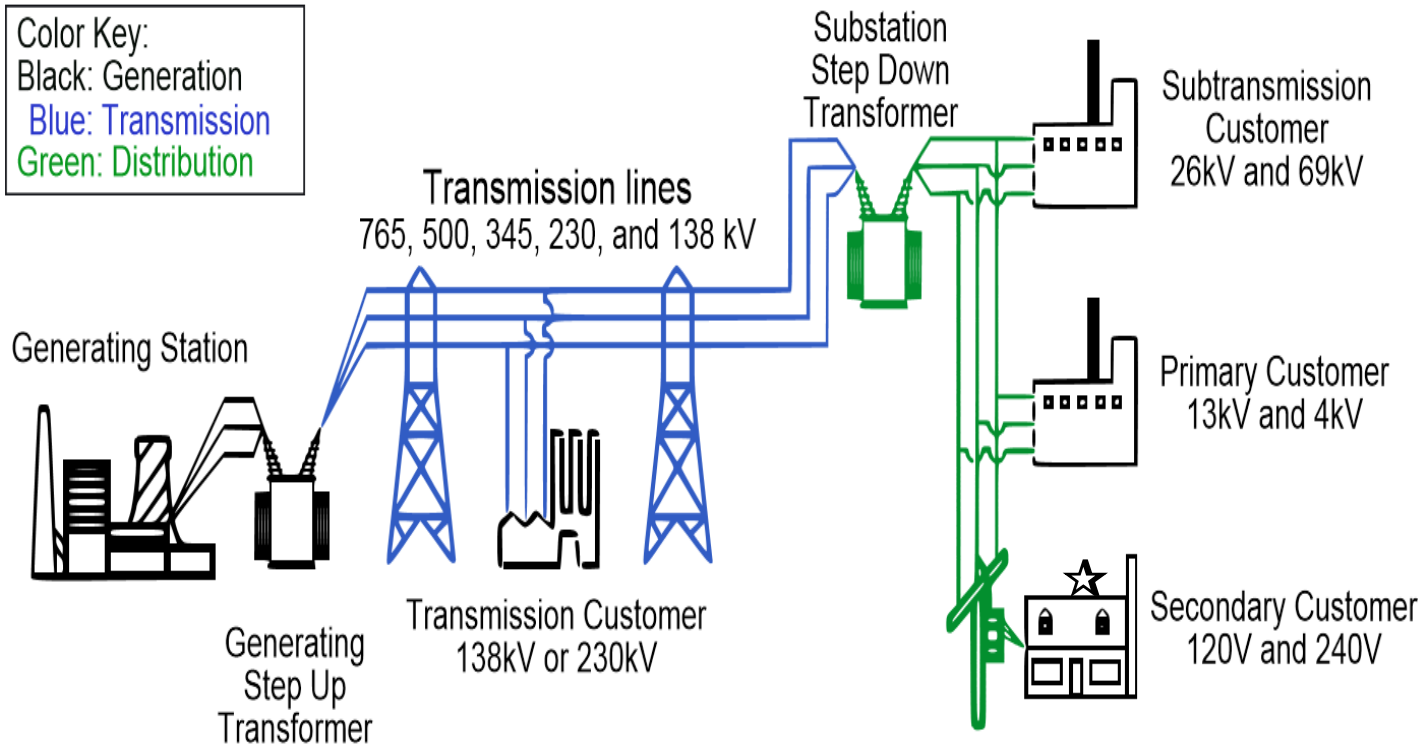

Protection Against HV Transformer Damage &
Power Grid Voltage Collapse has Been Developed & can be Implemented

100 Year Geo-Electric Field Magnitudes (for 4,800 nT/min Storm)

Area in North America	WI, MI, VT, NH, Ont., Quebec
100 Year Geo- E. Field J. Kappenman,	15.2 V/km

Estimates from J. Kappenman are from MetTech Report # 319, 2010 scaled up to 4,800 nT/min.

100 Year Geo-Electric Field Magnitudes (for 4,800 nT/min Storm)

Area in North America	WI, MI, VT, NH, Ont., Quebec
100 Year Geo- E. Field J. Kappenman,	15.2 V/km
Area in North America	**Quebec**
100 Year Geo-E. Field A. Pulkkinen et.al.,	20 V/km (10 to 50 V/km)

Estimates from J. Kappenman are from MetTech Report # 319, 2010 scaled up to 4,800 nT/min.
Data from A. Pulkkinen et.al. are from Space Weather publication in 2012

100 Year Geo-Electric Field Magnitudes (for 4,800 nT/min Storm)

Area in North America	WI, MI, VT, NH, Ont., Quebec	Lower NY, NJ, Eastern PA
100 Year Geo- E. Field J. Kappenman,	15.2 V/km	31.2 V/km
Area in North America	**Quebec**	
100 Year Geo-E. Field A. Pulkkinen et.al.,	20 V/km (10 to 50 V/km)	

Estimates from J. Kappenman are from MetTech Report # 319, 2010 scaled up to 4,800 nT/min.
Data from A. Pulkkinen et.al. are from Space Weather publication in 2012

100 Year Geo-Electric Field Magnitudes for 4,800 nT/min Storm

Area in NA	Southern States (AL, GA, NC, SC, TN)	British Col.	WI, MI, VT, NH, Ont., Quebec	Lower NY, NJ, Eastern PA
100 Year Geo- E. Field J. Kappenman,	4.8 V/km	4.4 V/km	15.2 V/km	31.2 V/km
Area in NA		**British Col.**	**Quebec**	
100 Year Geo-E. Field A. Pulkkinen et.al.,		5 V/km (3 to 15 V/km)	20 V/km (10 to 50 V/km)	

Estimates from J. Kappenman are from MetTech Report # 319, 2010 scaled up to 4,800 nT/min.
Estimates from A. Pulkkinen et.al. are from Space Weather publication in 2012

GIC Grid Modeling

- Power World has recently added geomagnetic induced current (GIC) analysis to their power flow analysis
  - Provides analysis to help answer questions concerning:
    - grid instability from increased transformer MVAR loss
    - Identifies locations of potential damage to critical infrastructure (i.e. transformers, SVCs, etc.)

GIC Modeling – cont'd

ATC Approach:

- Requested transformer data from ATC for large Auto-transformers and GSUs
- Analyzed PowerWorld model to reflect correct transformer configurations and input data

	Number in category
auto	70
gsu	42
auto-69	124
gsu-peak	54
gsu-small	17
hydro	28
wind	5
dist	454
unknown	0
total	794

GIC Modeling – cont'd

Approach:

- Simulate a range of electric field intensities (2 V/km to 80 V/km)
  - 2 V/km was the field that caused the 1989 blackout in Quebec
  - 20 V/km (range 10 to 50 V/km) for 100 Yr storm(A. Pulkkinen et. al.)
- Simulate a range of electric field orientations
  - North-south and east-west should be examined
  - Include the orientation that aligns with most of the transmission lines in the area of interest
- Simulate GMD effects in one area of interest (AOI)
- Identify electric field strength that leads to voltage collapse
- Simulate the grid stability improvements as GIC blocking devices are applied

Voltage Change at 2 V/km, East-West

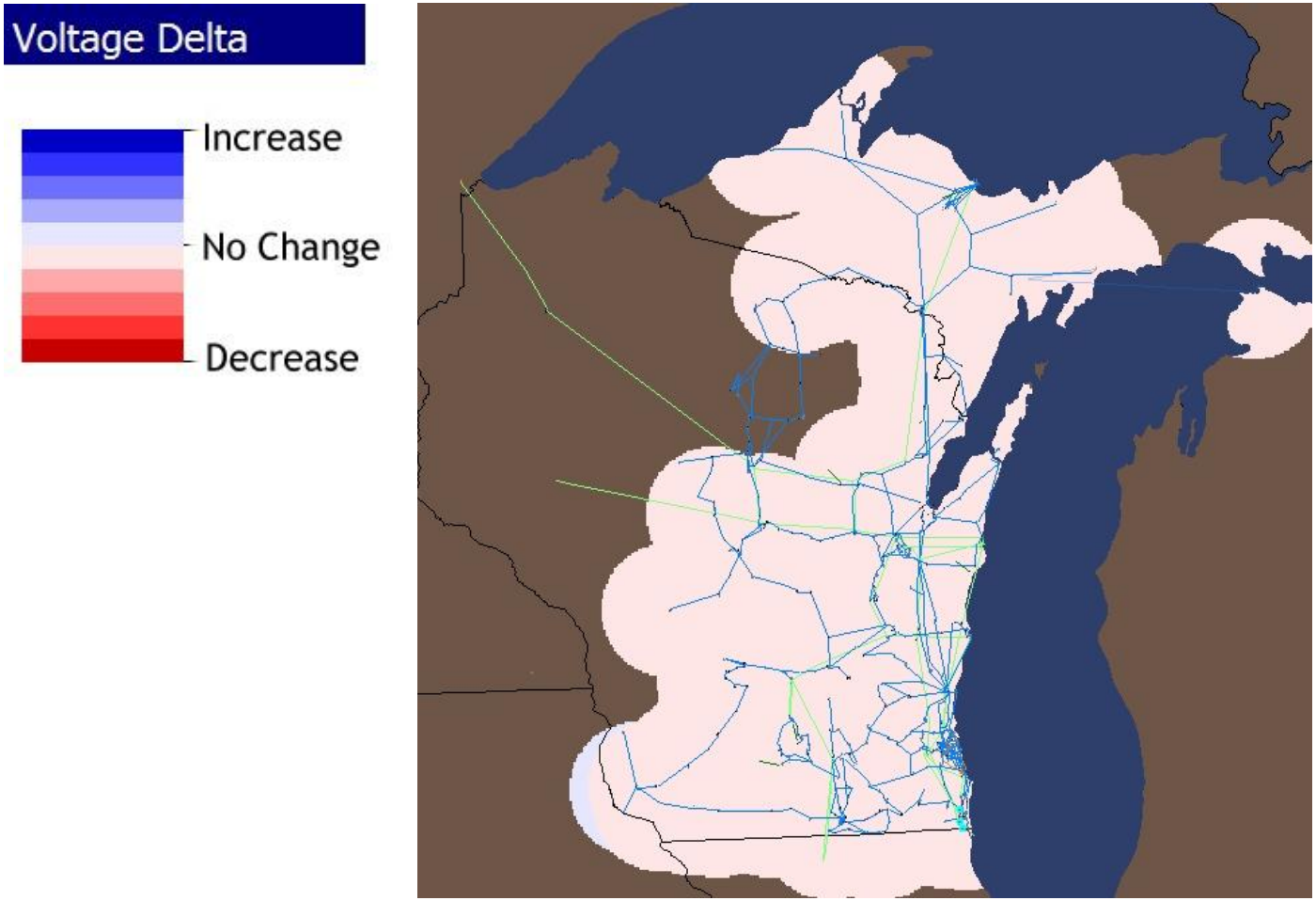

Power World Power Flow & GIC Modeling

Voltage Change at 17.5 V/km, East-West

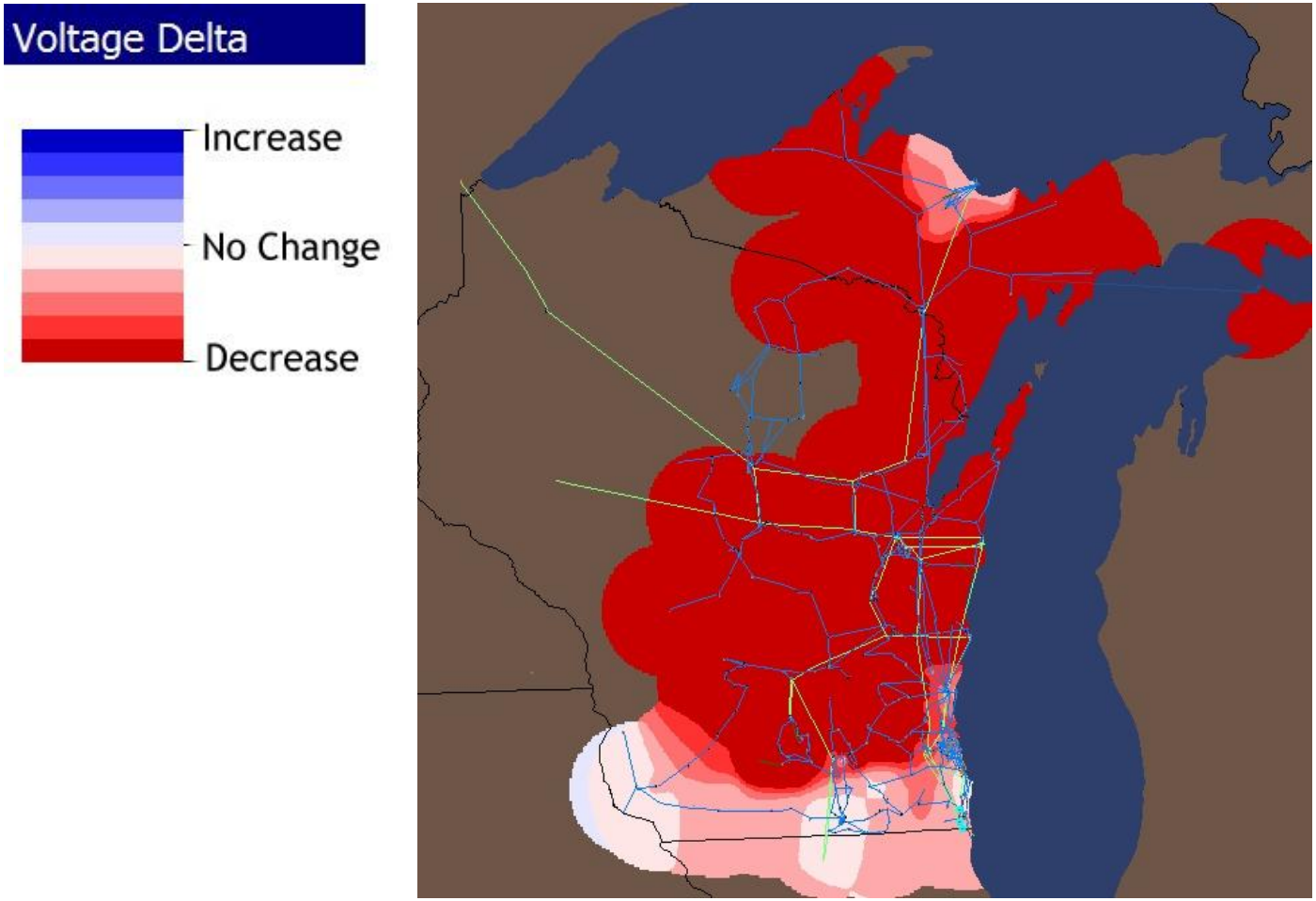

Power World Power Flow & GIC Modeling

Selection of ATC Transformers for Neutral Blocking Devices

1st Five Transformers	2nd Five Transformers	3rd Five Transformers	4th Five Transformers	5th Five Transformers
GSU Station C 345/22 #1	GSU Station **B** 345/19 #1	Substation E 345/138 #1	Substation E 138/13 #1	Substation OC 345/138 #2
GSU Station C 345/22 #2	Substation C 345/138 #2	Substation E 345/138 #2	Substation K 345/138 #1	Substation A 230/115 Kv Substation 345/230 #1
GSU Station B 345/19 #1	Substation S 345/138 #1	Substation K 345/138 #2	Substation C 345/138 #1	Substation SF 138/69 #1
GSU Station E 345/22 #1	Substation WM 345/138 #1	Substation SL 345/161 #1	Substation C 138/69 #1	Substation OC 345/138 #1
GSU Station K 345/20 #1	GSU Station E 345/22 #1	Substation C 345/138 #3	Substation SG 138/25 #1	GSU FW 138/35 #1

ATC (Wisc. Pw Grid) GIC/Power Flow Simulations using PowerWorld Software

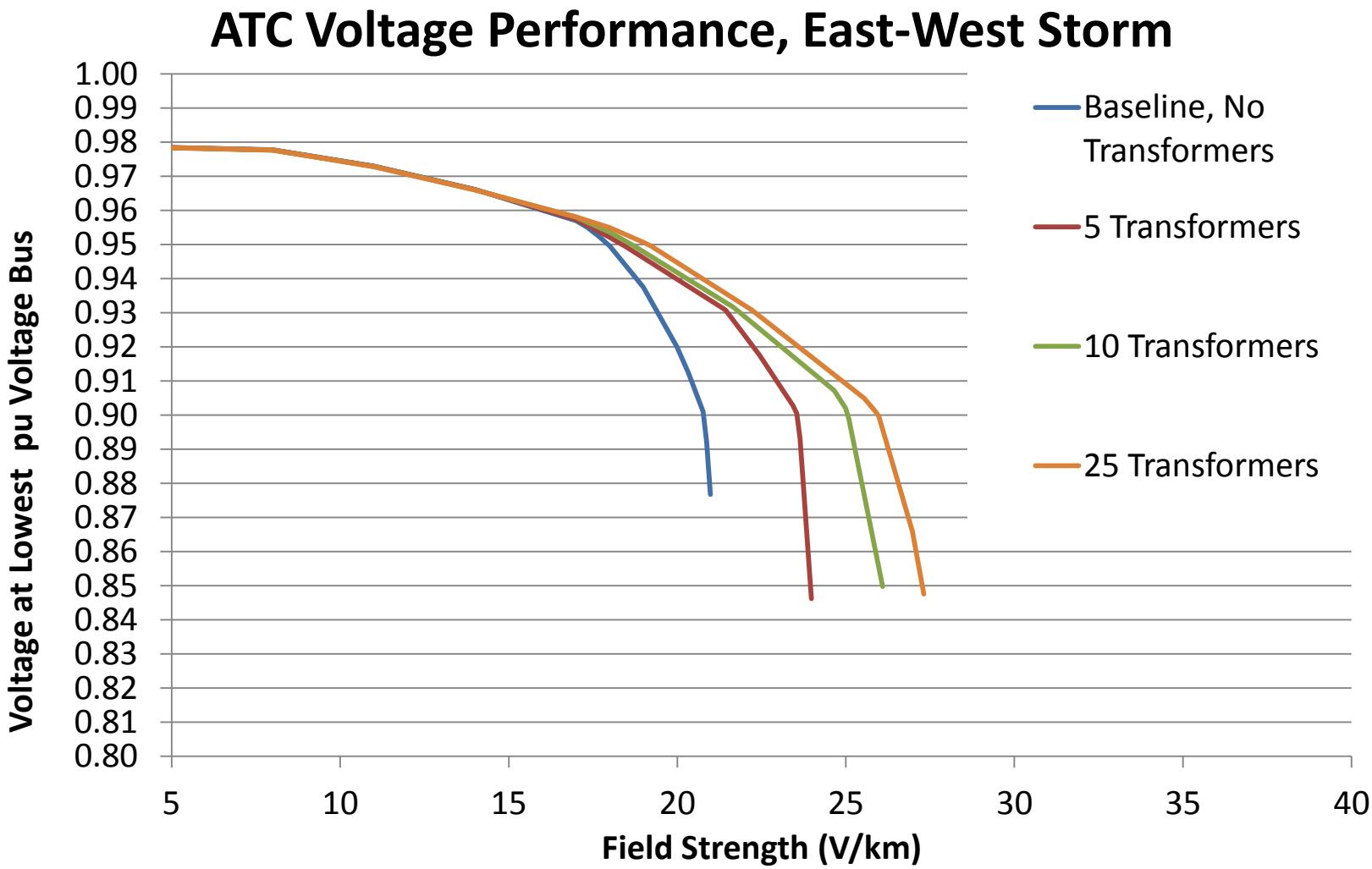

Solid Ground GIC Mitigation

- Preliminary Results show:
  - ATC Voltage collapse occurs at 21.1 V/km(E-W)
  - Solid Ground capacitive neutral protection was simulated on 5 , 10, 15, 20 and 25 transformers in the AOI
  - Field strength for voltage collapse for 25 neutral blocking devices increased to 27.2 V/km (E-W) or + 29%

Significant Increases in Field Strength for Increased Number of Neutral Blocking Devices

Wisc. Voltage Collapse Simulation versus 100 Yr Storm Prediction

- Power World Estimated Field for Wisconsin Voltage Collapse:
  - 21 V/km mean, +/- 20% give range of 17 to 25 V/km
- 100 Year Predicted Geo-electric Field [1]:
  - 20 V/km mean, with range of 10 to 50 V/km

[1] Estimates from A. Pulkkinen et.al. are from Space Weather publication in 2012

Neutral Blocking Devices Impact at Columbia Site, Field 20 V/km N-S (three phase GIC currents in amps)

Columbia Transformers	No Blocking North- South Field	5 Blocked – Columbia GSUs Blocked	10 Blocked – Columbia Auto-Transformers #2 Blocked	15 Blocked- Columbia Auto-Transformers #3 Blocked
GSU Station C 345/22 #1	818 amps	0 amps	0 amps	0 amps
GSU Station C 345/22 #2	826 amps	0 amps	0 amps	0 amps
Substation C 345/138 #1	50. amps	275 amps	534 amps	775 amps
Substation C 345/138 #2	154 amps	833 amps	0 amps	0 amps
Substation C 345/138 #3	51 amps	277 amps	539 amps	0 amps
Substation C 138/69 #1	13 amps	193 amps	385 amps	563 amps

PowerWorld GIC & Power Flow Simulation Results to Date

- Geo-electric field for voltage collapse is close to the predicted peak 100 year mean field value
- Insertion of transformer neutral blocking at points of highest GIC (i.e. five units at a time) shows improved field collapse values
- Ten (10) & twenty five (25) neutral ground devices show field collapse improvements of 26% and 29%
- Blocking GIC current at a sub-station will require blocking on all station transformers
  - A single SolidGround™ device can be used for one to three transformers at a sub
- Placement of single neutral blocking device does not improve power system voltage degradation
  - But a blocking device will decrease heating and out-gassing and thereby increase the expected life of the transformer

Potential Further Detrimental Factors

- Effects of contingencies, i.e. loss of shunt capacitors, loss of generation, etc.
- Variations of at off-peak and shoulder load levels
- Effects of operating strategies – reactive switching during events and additional generation
- Variations in soil conductivity within an area of interest

SOLIDGROUND™

Grid Resiliency System

Geomagnetic Induced Current (GIC) causes transformer half-cycle saturation and large VAR consumption on the grid

Protects the power grid from solar storms and Electromagnetic Pulse (EMP) threats

SolidGround™

Automated protection (with manual overrides)

Transformer is *always* effectively grounded

Uses commercially available components

Laboratory and field verified

Factory assembled; arrives ready to install

Offers financial operating advantages

Applicable to HV transformers, SVC's, station power

ABB Power and productivity for a better world™

There is a long history measuring issues related to geomagnetic storms; dating back to 1859.

1859 / 1921 Rail and Telegraph outages

March, 1989, Quebec outage

L. Bolduc, "GIC Observations and studies in the Hydro-Quebec power system", Journal of Atmospheric and Solar-Terrestrial Physics 64 (2002) 1793 – 1802

March, 2001 and October, 2001 South African instabilities

J. Koen and R. Gaunt, "Geomagnetically Induced Currents in the Southern African Electricity Transmission Network", 2003 IEEE Bologna Power Tech Conference, June 23th – 26th, Bologna, Italy

University of Minnesota research

V.D. Albertson, J.M. Thorson, Jr., S.A. Miske, Jr., "The Effects of Geomagnetic Storms on Electrical Power Systems, IEEE Transactions, T73, 370-4, May 23, 1973

Grid stability, outages, and blackout potentials have been known for years …

Mitigation of Geomagnetically Induced and DC Stray Currents EPRI December, 1983

"Capacitors are the best solutions"

"Prefer a design with a solid ground"

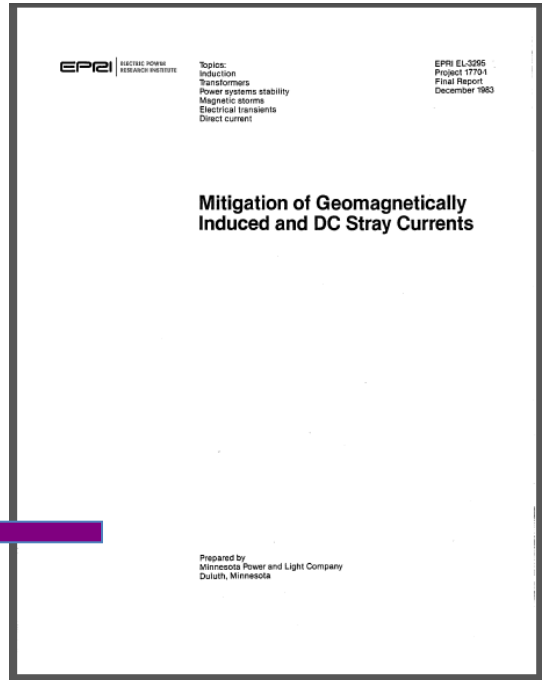
EPRI ELECTRIC POWER RESEARCH INSTITUTE

Topics:
Induction
Transformers
Power systems stability
Magnetic storms
Electrical transients
Direct current

EPRI EL-3295
Project 1770-1
Final Report
December 1983

Mitigation of Geomagnetically Induced and DC Stray Currents

Prepared by
Minnesota Power and Light Company
Duluth, Minnesota

The electric utility industry has researched GIC mitigation approaches over the same period.

Geomagnetically Induced Currents Conference: EPRI June, 1992

GIC Mitigation: A Neutral Blocking/Bypass Device
Conceptual Design and Performance Evaluation

"Therefore, inserting blocking devices in neutral leads appears to be the most logical and effective means of preventing GIC flow."

"The study concluded that a capacitor placed in the neutral of transformers is the most effective and practical blocking device"

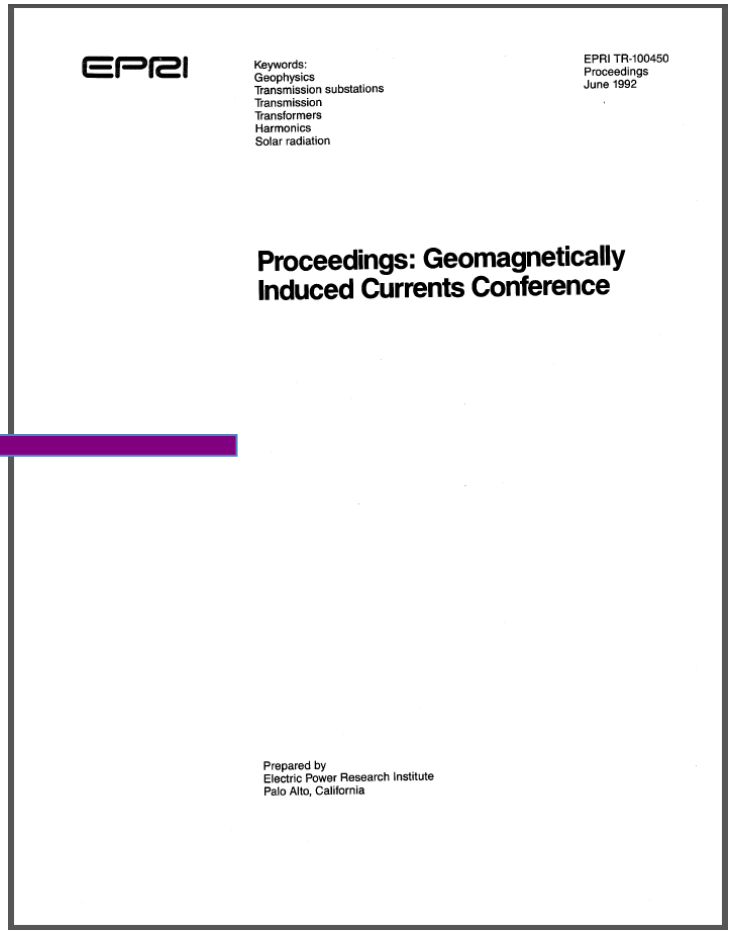

EPRI

Keywords:
Geophysics
Transmission substations
Transmission
Transformers
Harmonics
Solar radiation

EPRI TR-100450
Proceedings
June 1992

Proceedings: Geomagnetically Induced Currents Conference

Prepared by
Electric Power Research Institute
Palo Alto, California

DC Current Blocking System Diagram

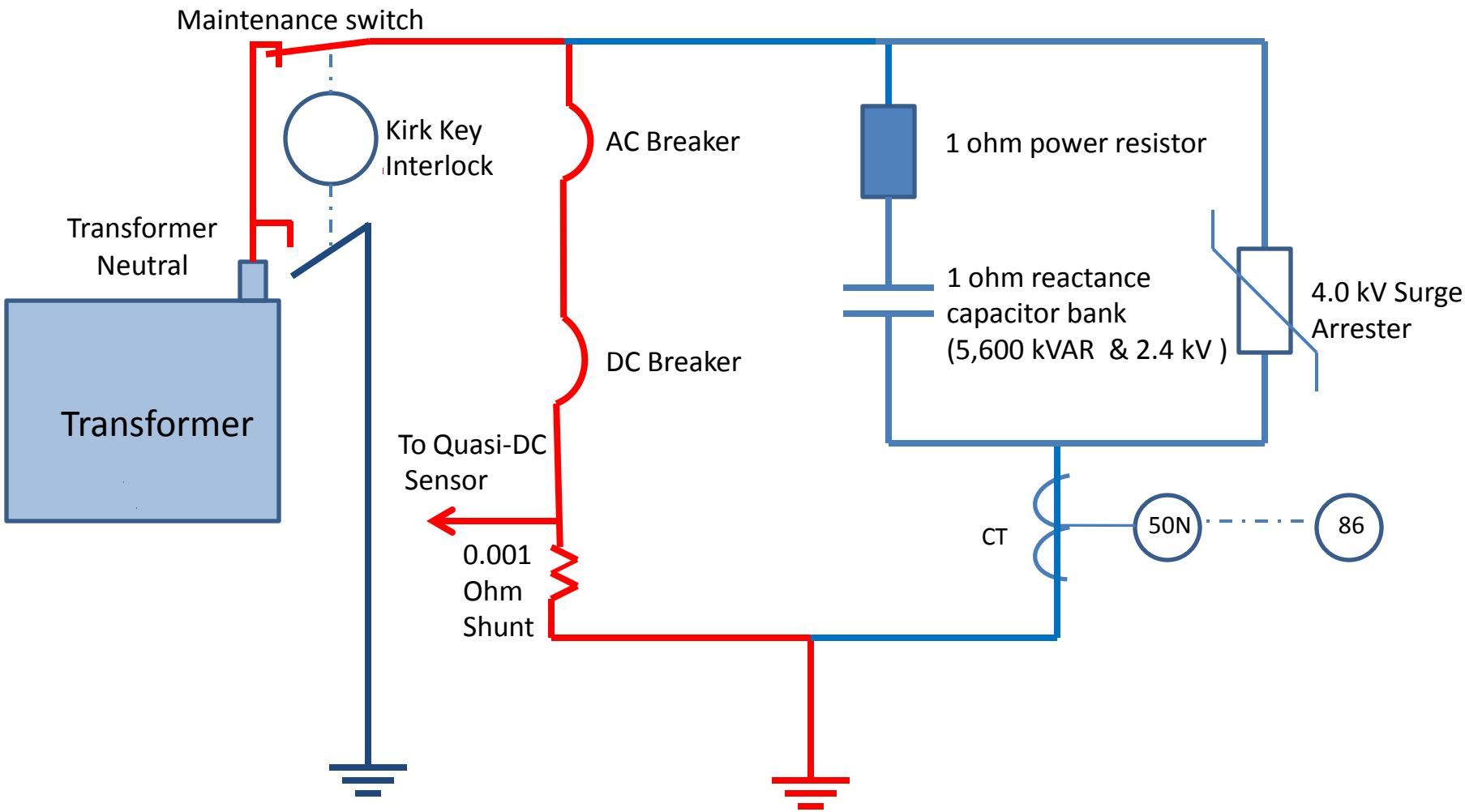

SolidGround™ Provides 3 Parallel Paths to Ground

Mode # 1: Full metallic ground through the switch assembly 99.8 % of time

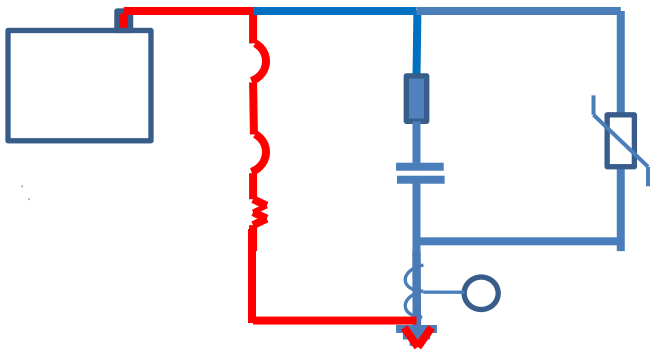

Mode # 2: Protection mode through resistor/capacitor bank 0.2% of time

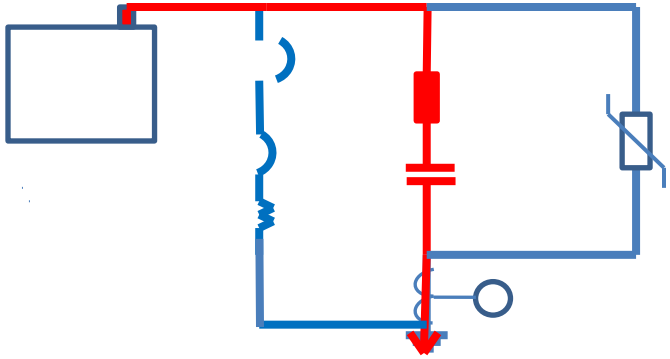

Mode # 3: Surge arrester handles the rare potential of a simultaneous DC current & a ground fault

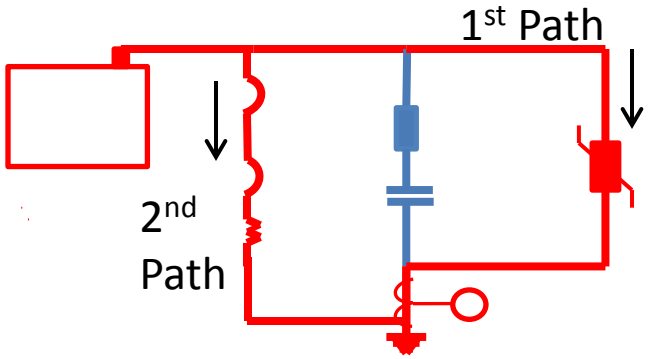

SolidGround operation has been validated in numerous ways

Software Simulation Modeling at the Univ. of Manitoba

Before

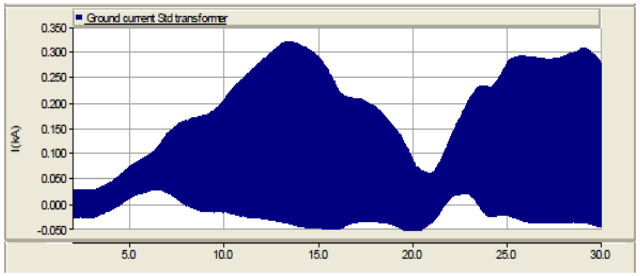

After

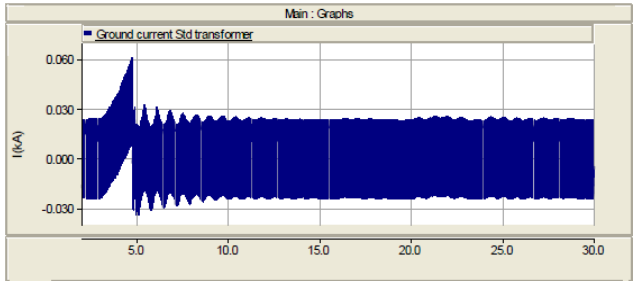

High Voltage Ground Fault Current Testing in Phil. PA

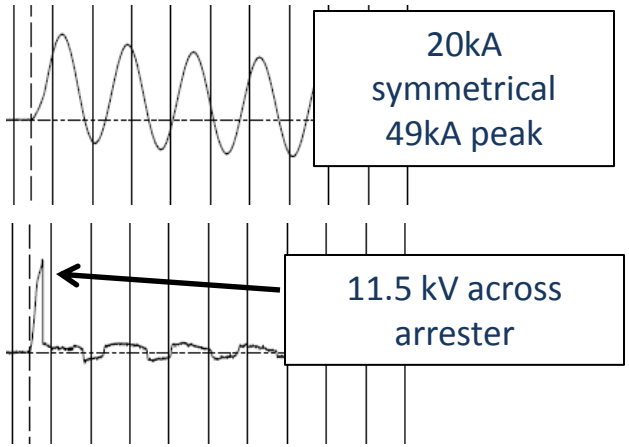

Idaho National Laboratory Grid Experiment

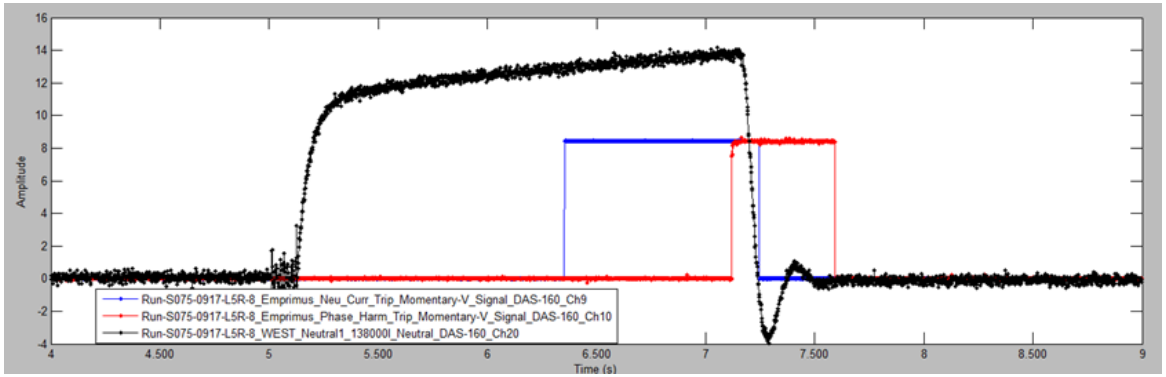

American Transmission Co. (ATC) Installation Plans

- ATC is considering installing a SolidGround™ (SG-22) system at one of their northern region sub-stations
- With this installation, ATC plans to gain on-line experience of neutral GIC blocking during future GMD events
- Results will be used to determine ATCs future directions w.r.t. GMD mitigation planning
- Reports will be shared with the appropriate NERC committees, EPRI and the power industry

SolidGround™ Economics

Solid Ground Pricing

- ABB has proposed Solid Ground to several potential customers
  - Price for ranges from $210k to $250k depending on the quantity
  - Estimates of contractor installation costs range from $25k to $50k
  - Total cost ranges from $235k to $300k per Solid Ground installation
  - One Solid Ground can protect from one to three transformers

Solid Ground Average Cost is about $80k to $100k per Transformer

SolidGround™ Equates to Large Savings

- SolidGround ™ Protection allows Utility Operators to Avoid the so called
  "Non-Economic Dispatch Procedure"

- Huge Annual Savings can be Realized

- "Solar Magnetic Disturbance: An Operator's Wish List," Greg A. Gucchi, PJM, EPRI-EPRI TR-100450: If we responded to every K alert of level 5 or greater, **PJM would have spent over $100 million in excess incremental operating costs**…….The ultimate protection against SMD is mitigation."

SOLID GROUND

Geomagnetic disturbance impacts utilities & consumers

REUTERS

NextEra cuts N.H. Seabrook output due to solar activity

Recommend | Sign Up to see what your friends recommend.

July 16 | Mon Jul 16, 2012 10:35am EDT

(Reuters) - NextEra Energy Inc reduced the output of the 1,247-megawatt (MW) Seabrook nuclear power plant in New Hampshire to 68 percent from 85 percent due to solar magnetic activity, a spokesman at the U.S. Nuclear Regulatory Commission said Monday.

Tweet 2
Share
Share this
+1 0
Email
Print

"The solar storms Sunday night caused high circulating currents in the Seabrook transformers, according to the NRC"

"The reduced output at Seabrook came at a time when the power grid was already stressed…"

This one small example represents a cost to industry consumers of ~$24,000 / hr.
Preventive measure costs may be recovered by avoidance of just one event!

SOLIDGROUND™

Grid Resiliency System

Thanks for Your Attention

Protects the power grid from solar storms and Electromagnetic Pulse (EMP) threats

SolidGround™

Automated protection (with manual overrides)

Transformer is *always* effectively grounded

Uses commercially available components

Laboratory and field verified

Factory assembled; arrives ready to install

Offers financial operating advantages

Applicable to HV transformers, SVC's, station power

ABB Power and productivity for a better world™