Exciter AC7B and ESAC7B

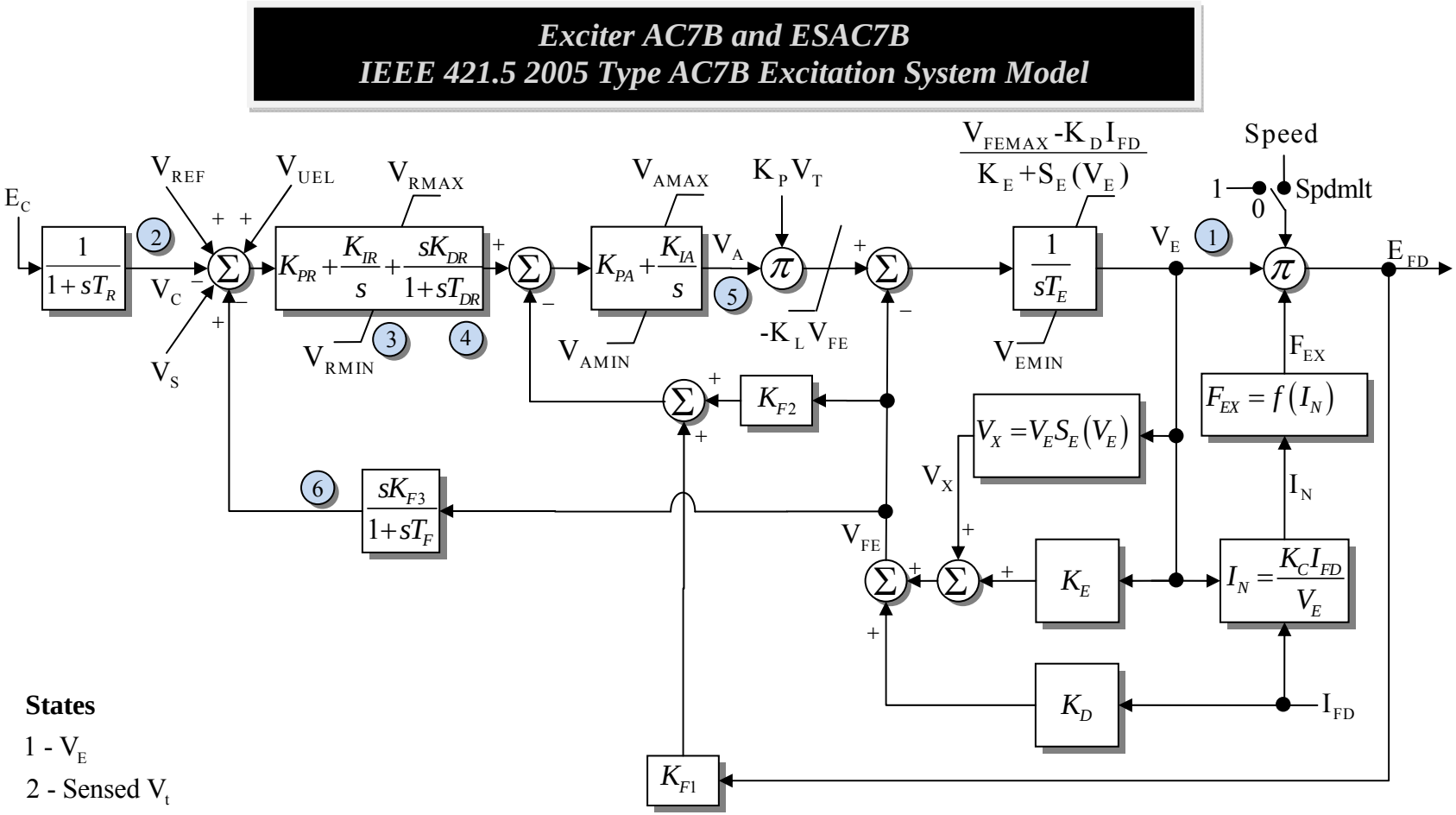

States

1 - V_E

2 - Sensed V_t

3 - K_{IR}

4 - K_{DR}

5 - V_A

6 - Feedback

AC7B supported by PSSE

ESAC7B supported by PSLF with optional speed multiplier

Exciter AC8B

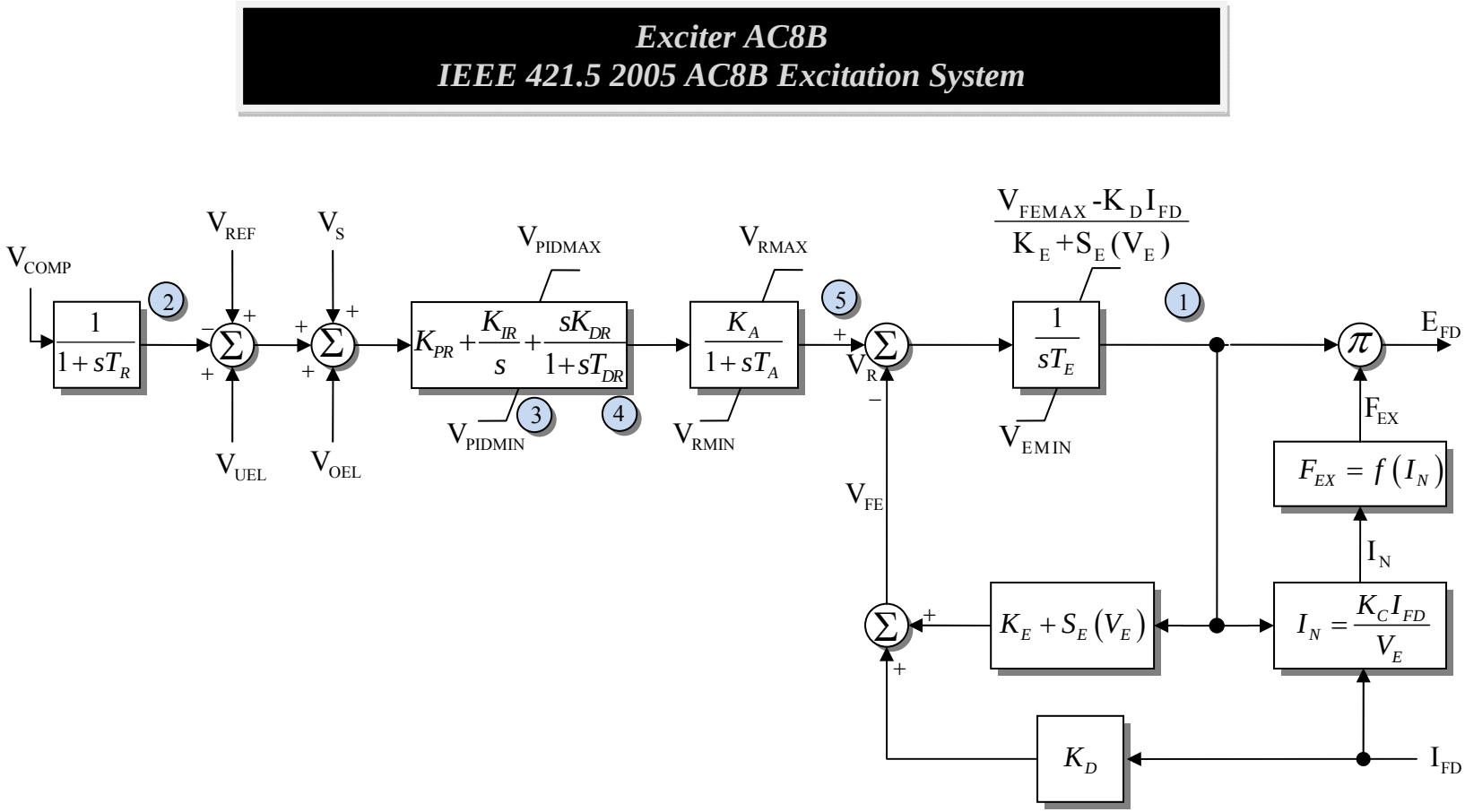

States

1 - V_E

2 - Sensed V_t

3 - PID 1

4 - PID 2

5 - V_R

Model supported by PSSE

Exciter BPA_EA

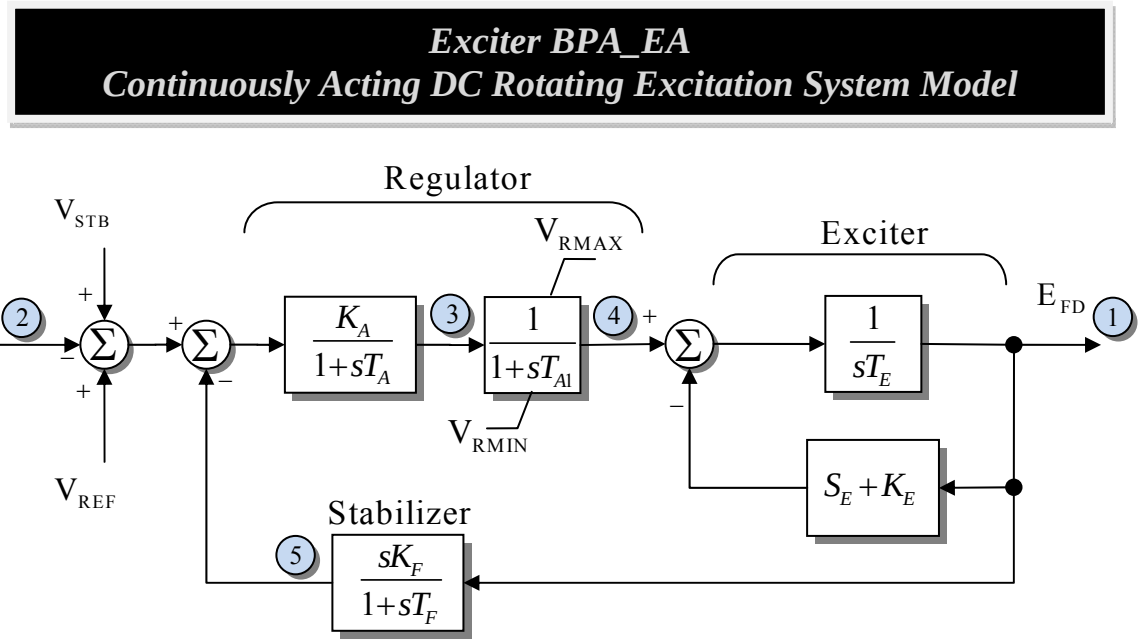

States

1 - E_{FD}

2 - Sensed V_t

3 - V_R

4 - V_{R1}

5 - V_F

Model in the public domain, available from BPA

Exciter BPA EB

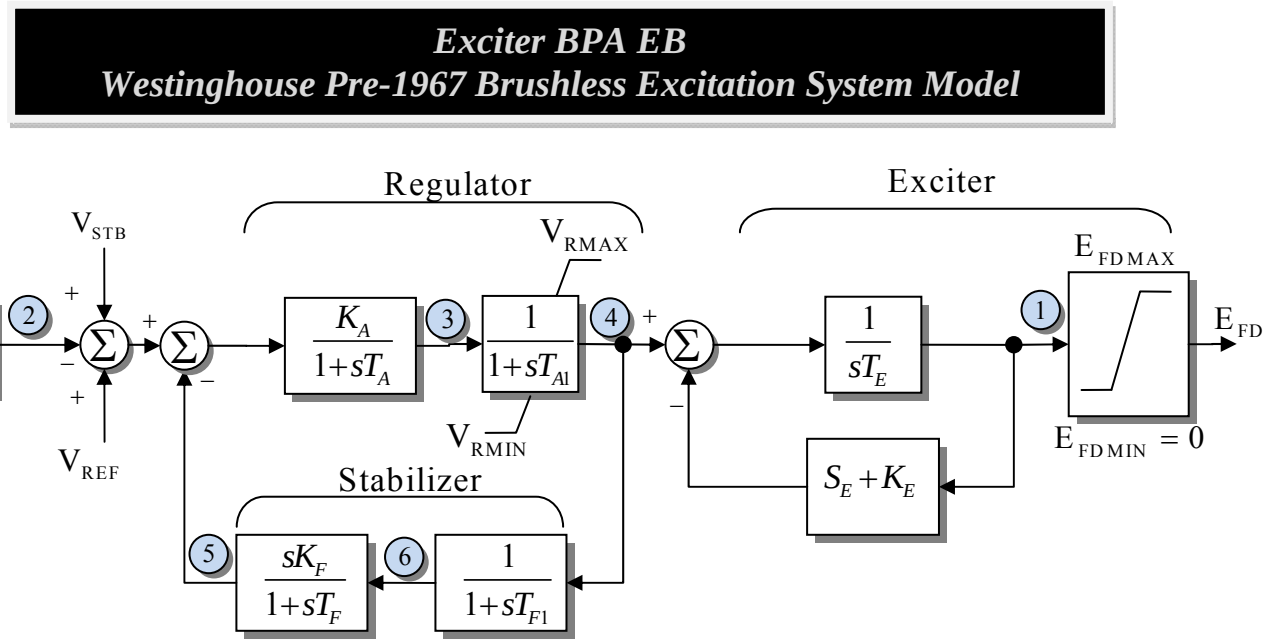

States

1 - E_{FD} before limit

2 - Sensed V_t

3 - V_R

4 - V_{R1}

5 - V_F

6 - V_{F1}

Model in the public domain, available from BPA

Exciter BPA EC

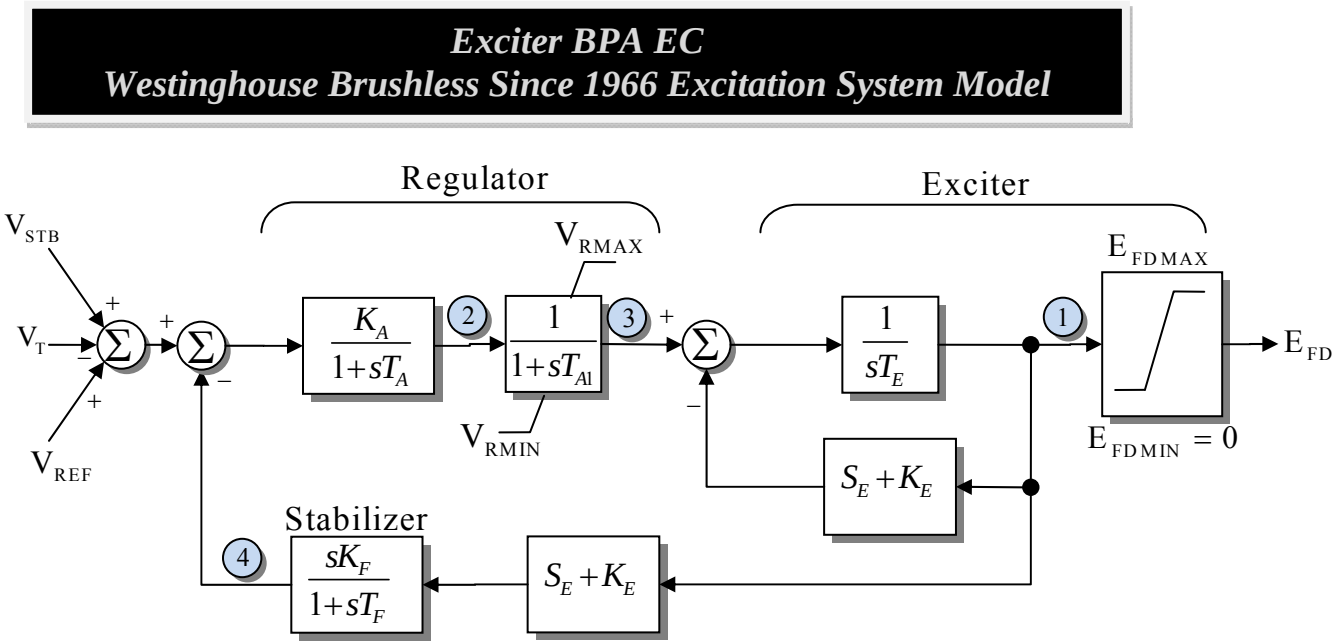

States

1 - E_{FD} before limit

2 - V_R

3 - V_{R1}

4 - V_F

Model in the public domain, available from BPA

Exciter BPA ED

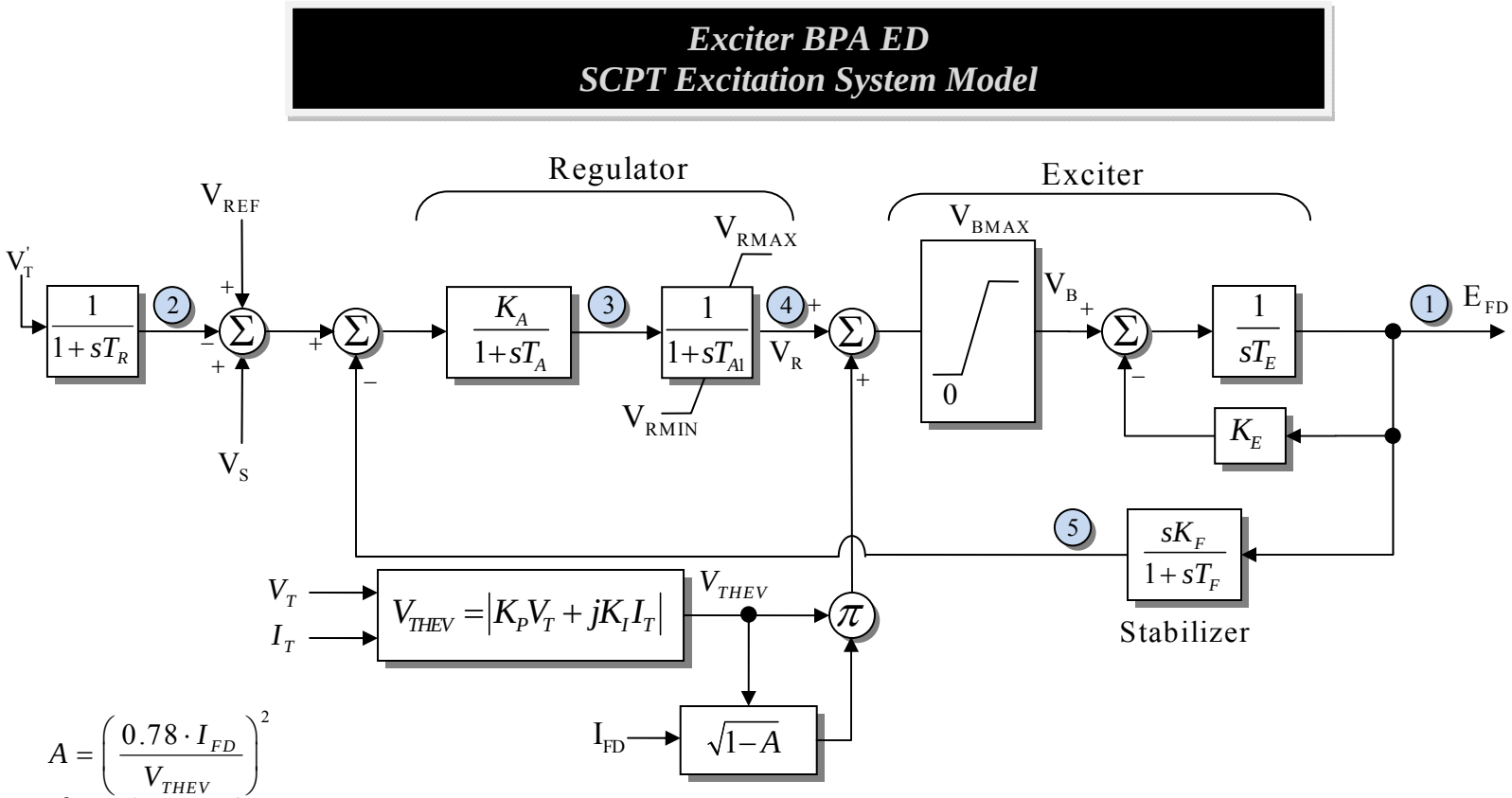

$$A = \left(\frac{0.78 \cdot I_{FD}}{V_{THEV}} \right)^2$$

If $A > 1$, $V_B = 0$

States

1 - EField

2 - Sensed V_t

3 - V_A

4 - V_R

5 - Feedback

Model in the public domain, available from BPA

Exciter BPA EE

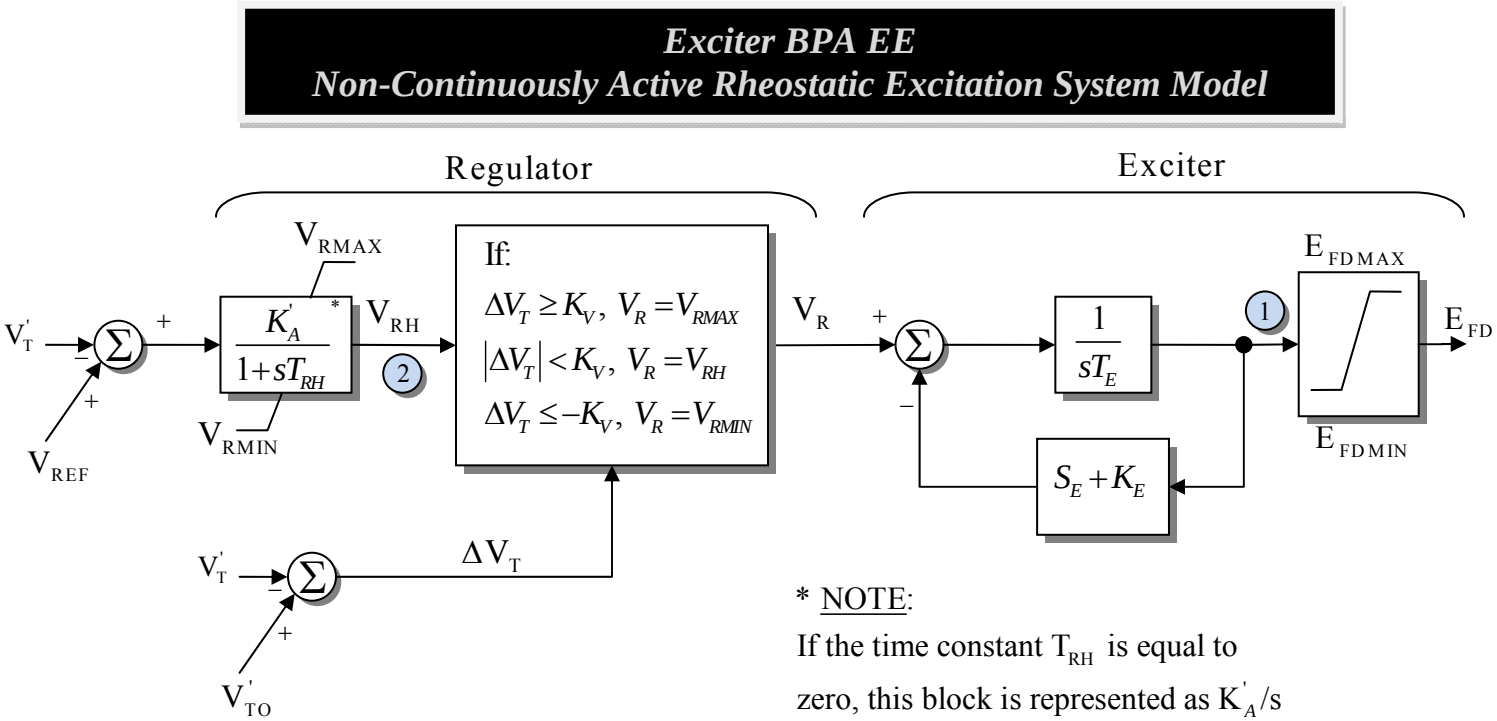

States

1 - EField before limit

2 - V_{RH}

Model in the public domain, available from BPA

Exciter BPA EF

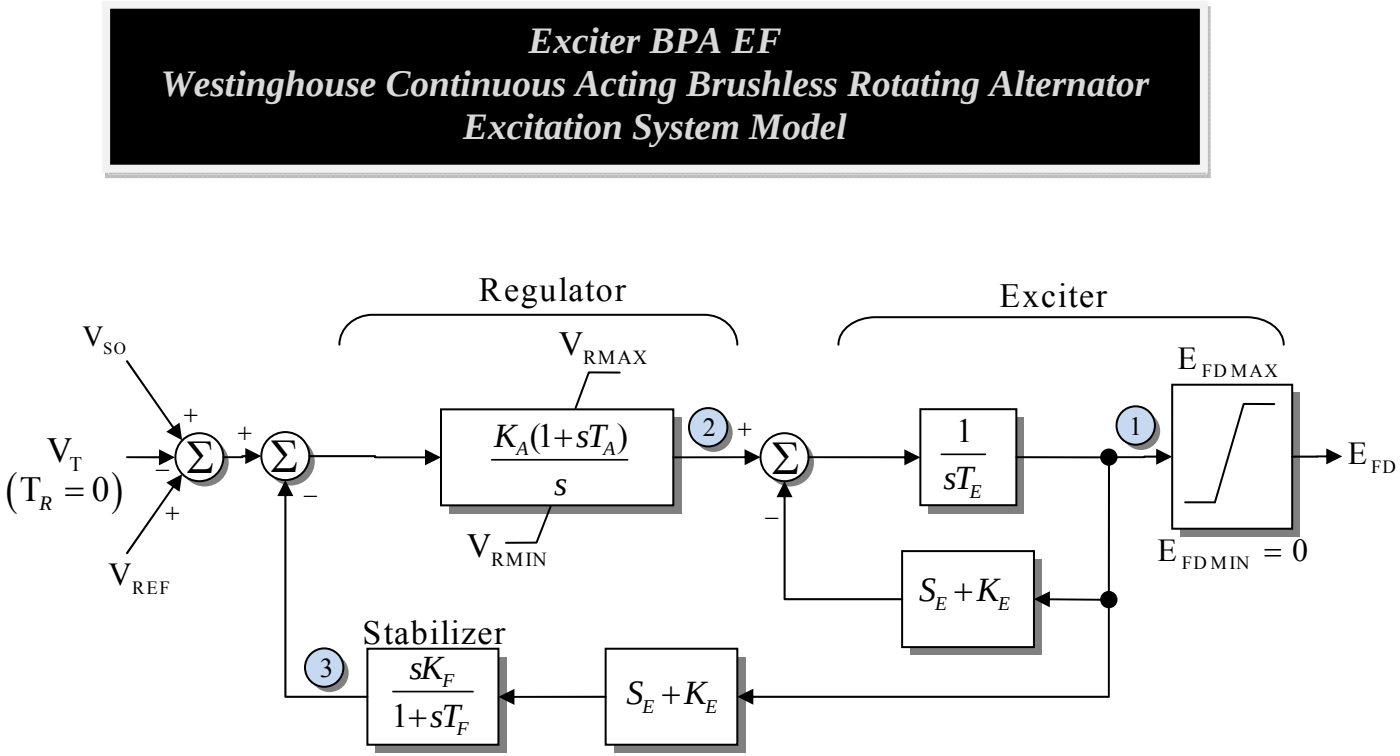

States

1 - EField before limit

2 - V_R

3 - V_F

Model in the public domain, available from BPA

Exciter BPA EG

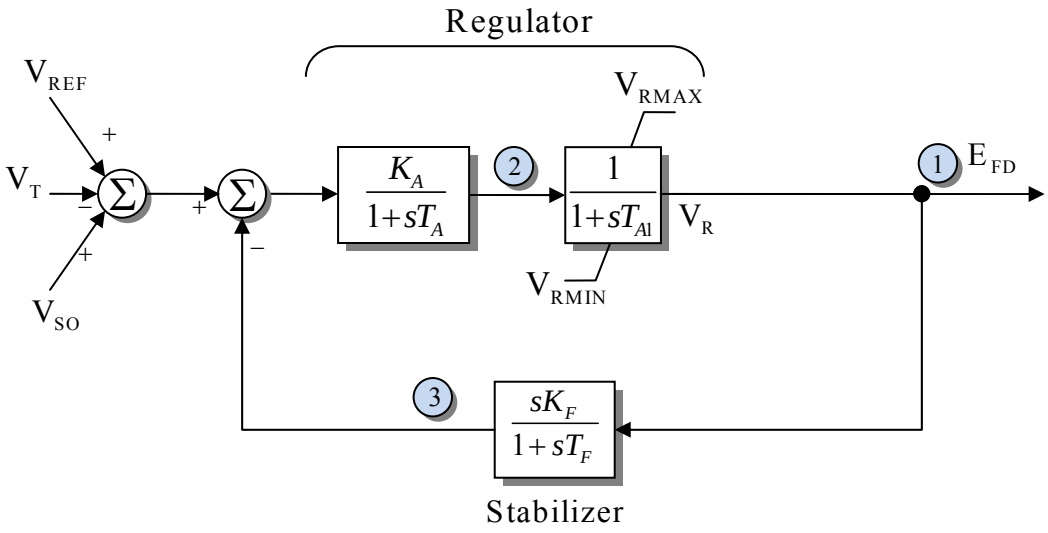

States

1 - EField

2 - V_A

3 - V_F

Model in the public domain, available from BPA

Exciter BPA EJ

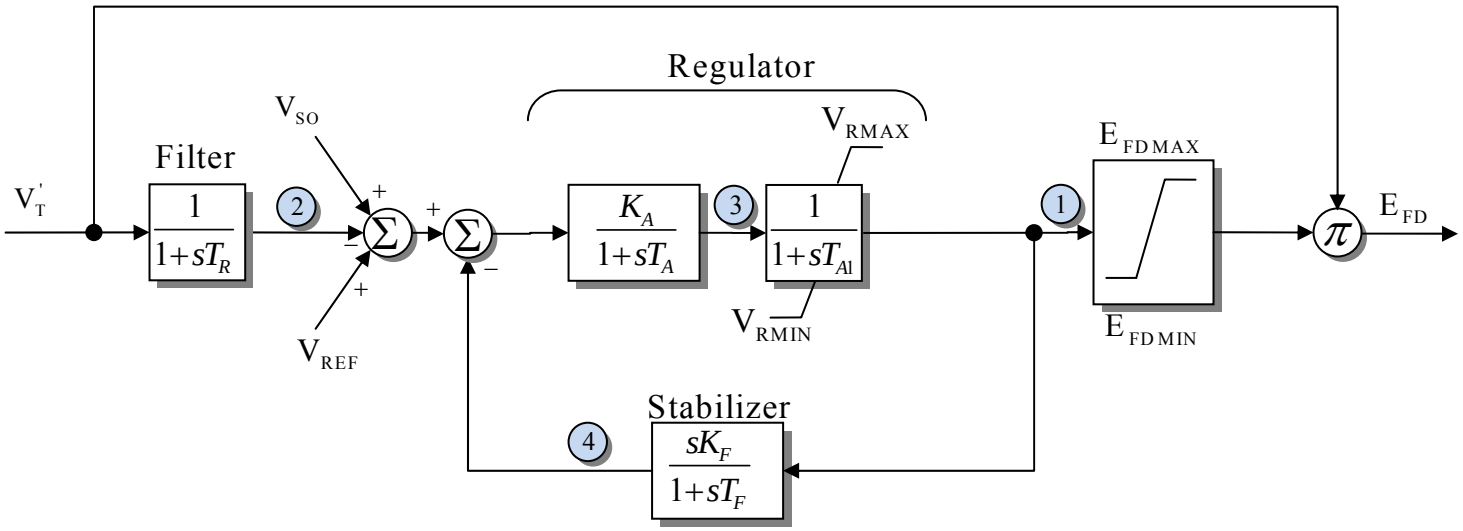

States

1 - EField before limit

2 - Sensed V_t

3 - V_R

4 - V_F

Model in the public domain, available from BPA

Exciter BPA EK

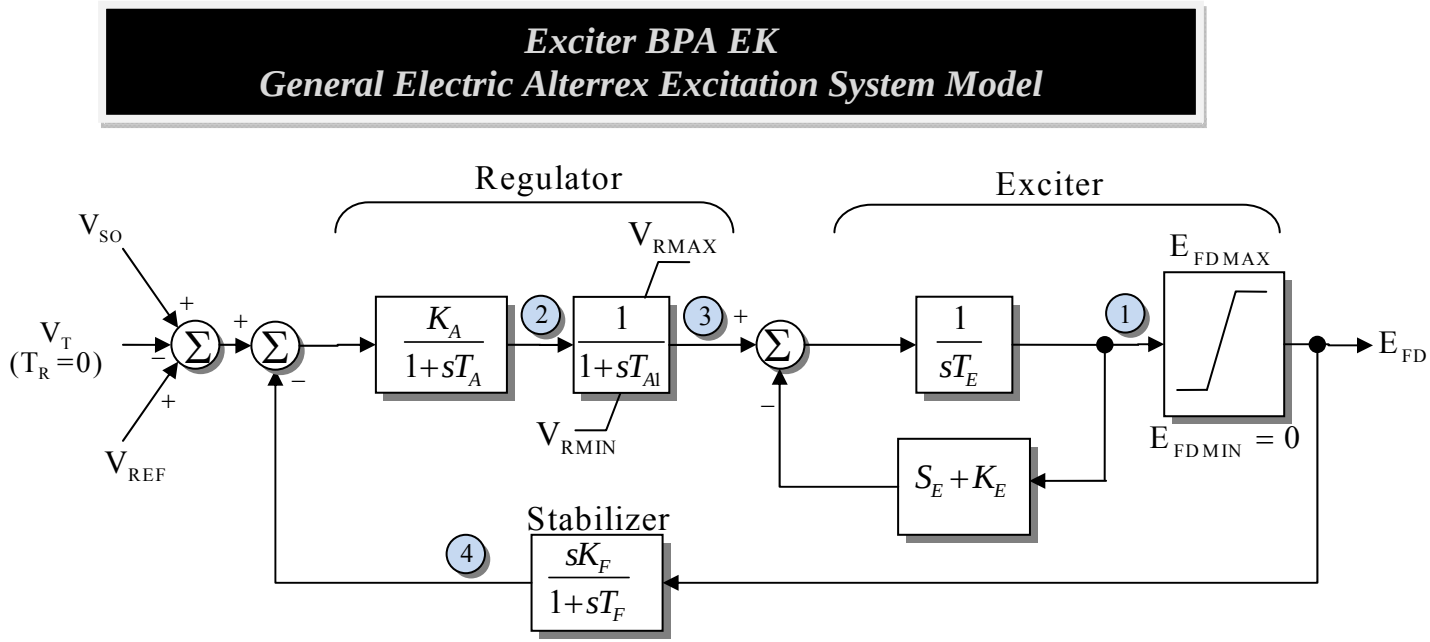

States

1 - EField before limit

2 - V_R

3 - V_{R1}

4 - V_F

Model in the public domain, available from BPA

Exciter BPA FA

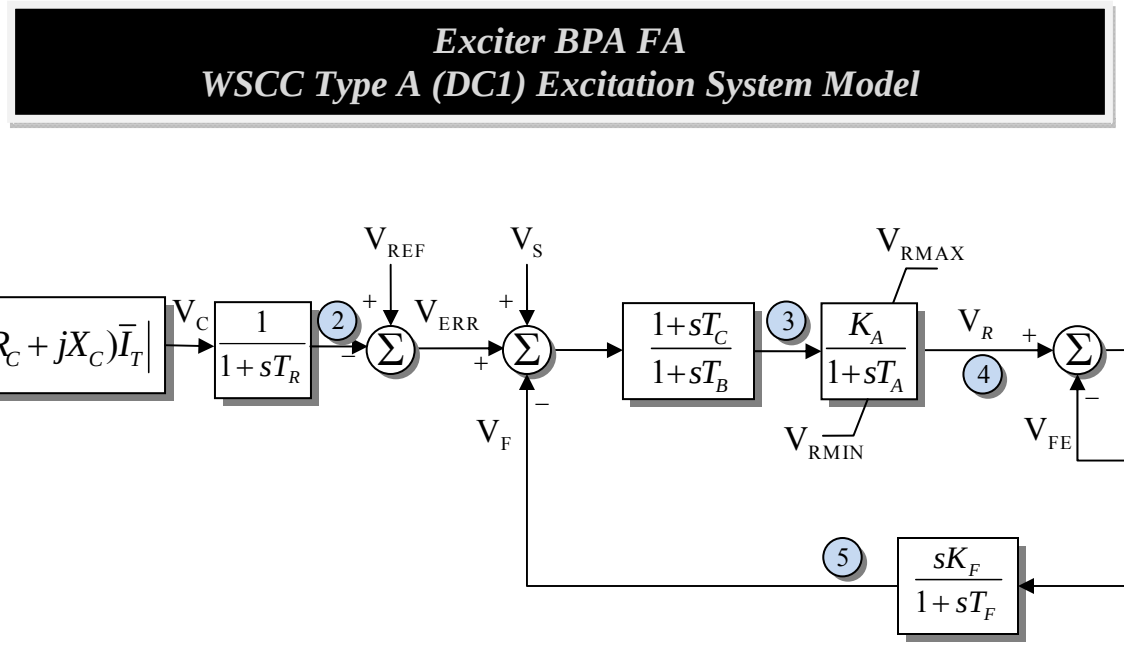

States

1 - EField

2 - Sensed V_t

3 - V_B

4 - V_R

5 - V_F

Model in the public domain, available from BPA

Exciter BPA FB

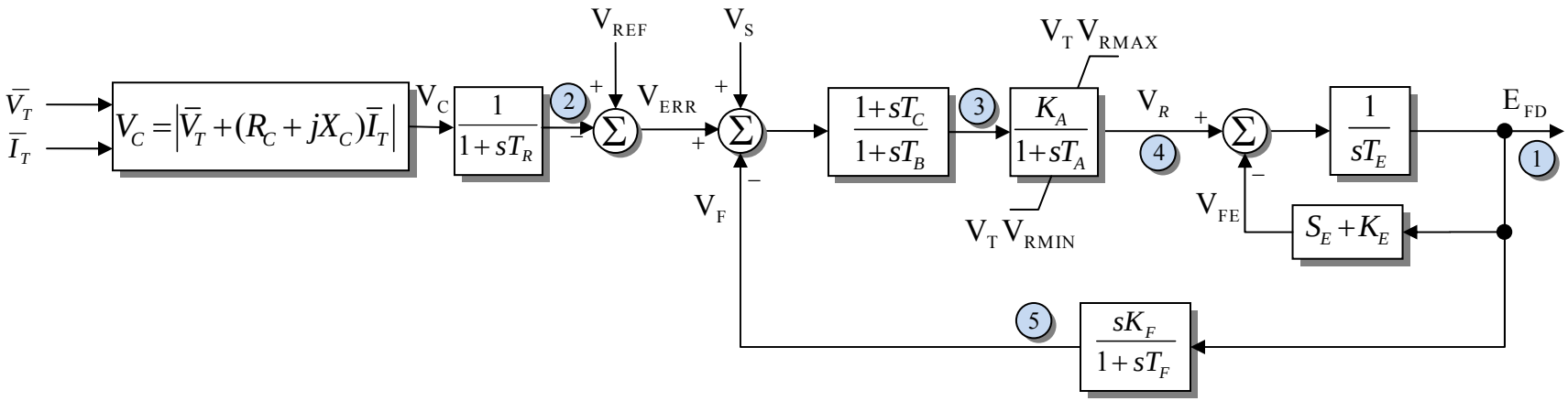

States

1 - EField

2 - Sensed V_t

3 - V_B

4 - V_R

5 - V_F

Model in the public domain, available from BPA

Exciter BPA FC

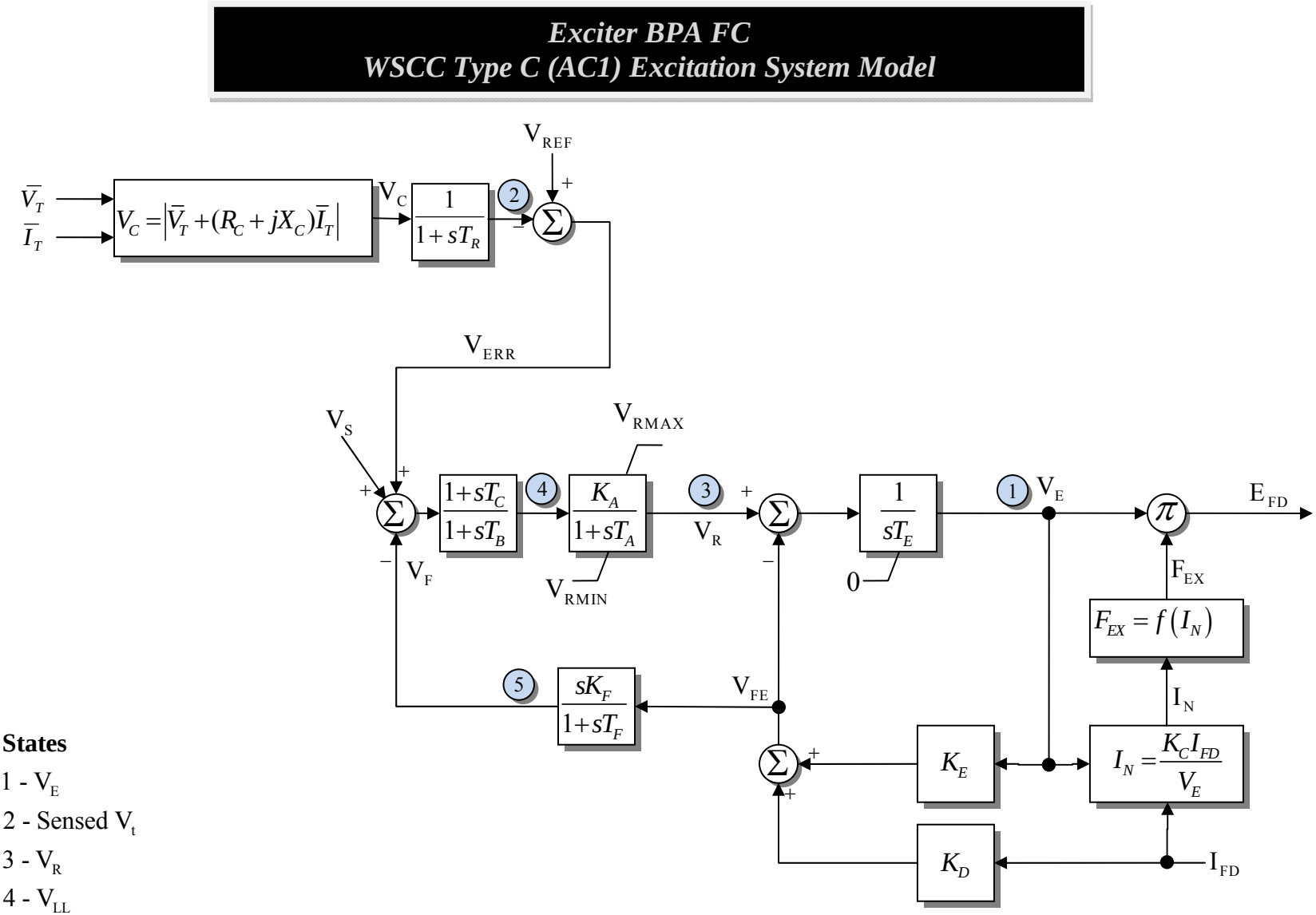

States

1 - V_E

2 - Sensed V_t

3 - V_R

4 - V_{LL}

5 - V_F

Model in the public domain, available from BPA

Exciter BPA FD

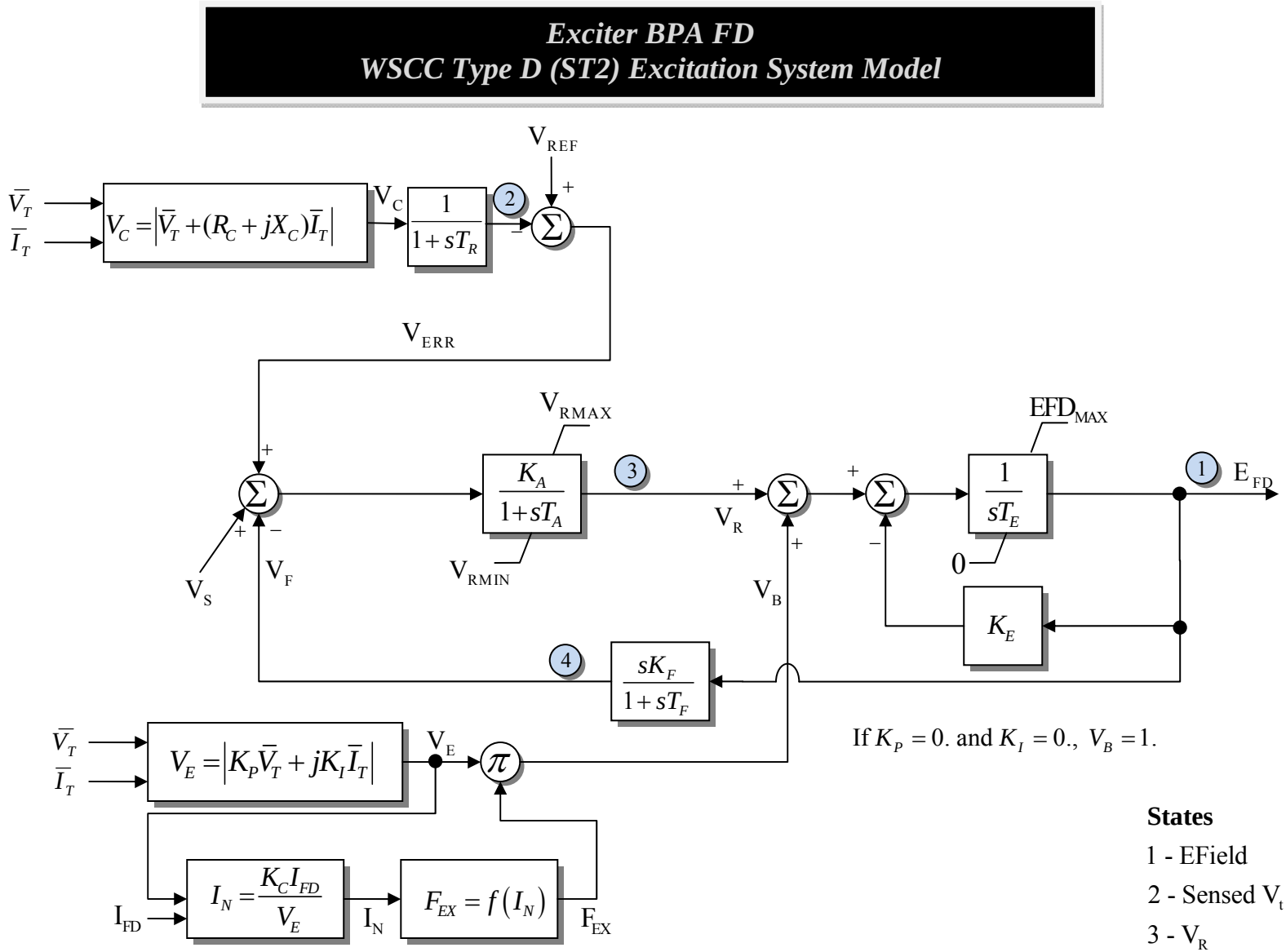

Model in the public domain, available from BPA

Exciter BPA FE

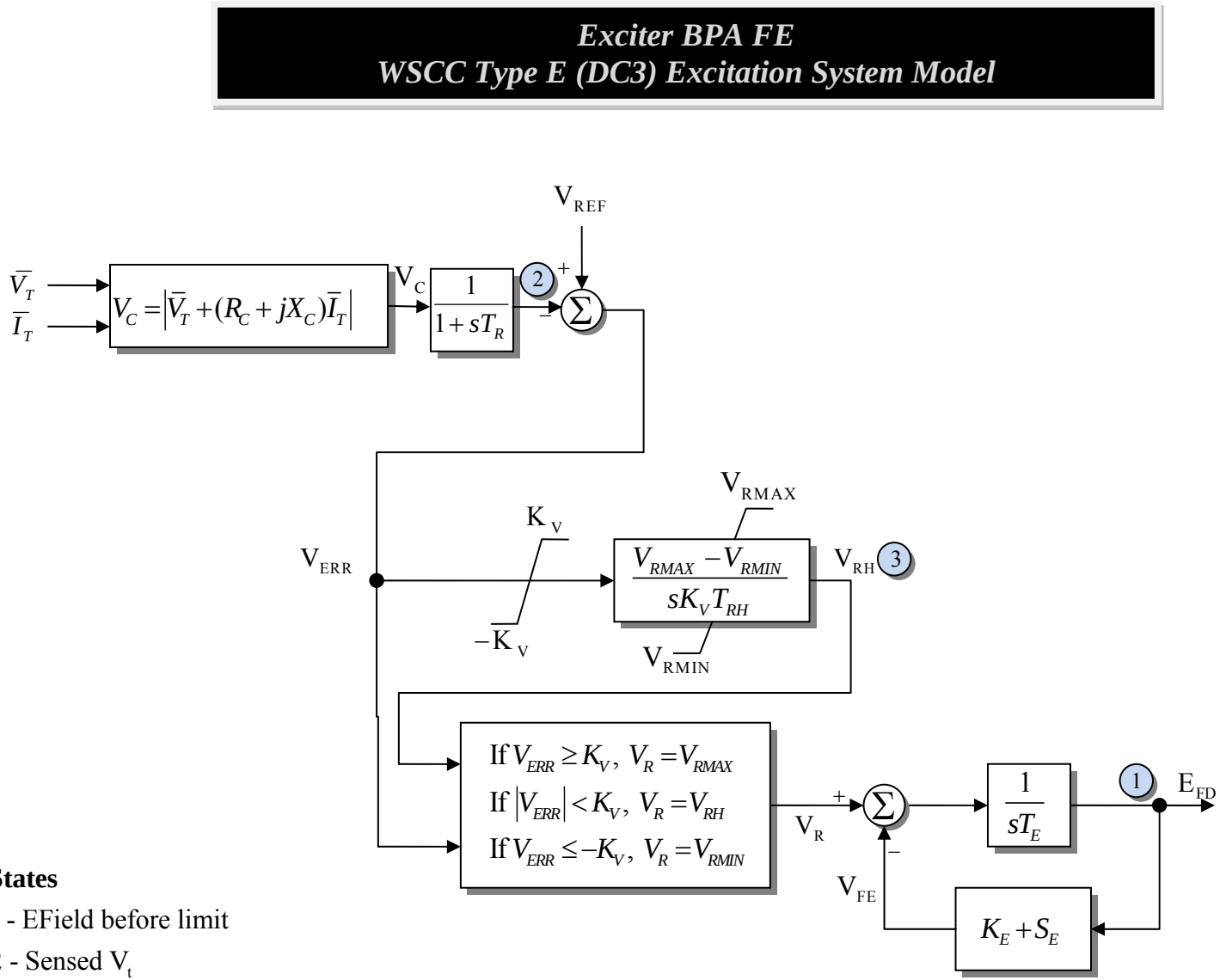

States

1 - EField before limit

2 - Sensed V_t

3 - V_{RH}

Model in the public domain, available from BPA

Exciter BPA FF

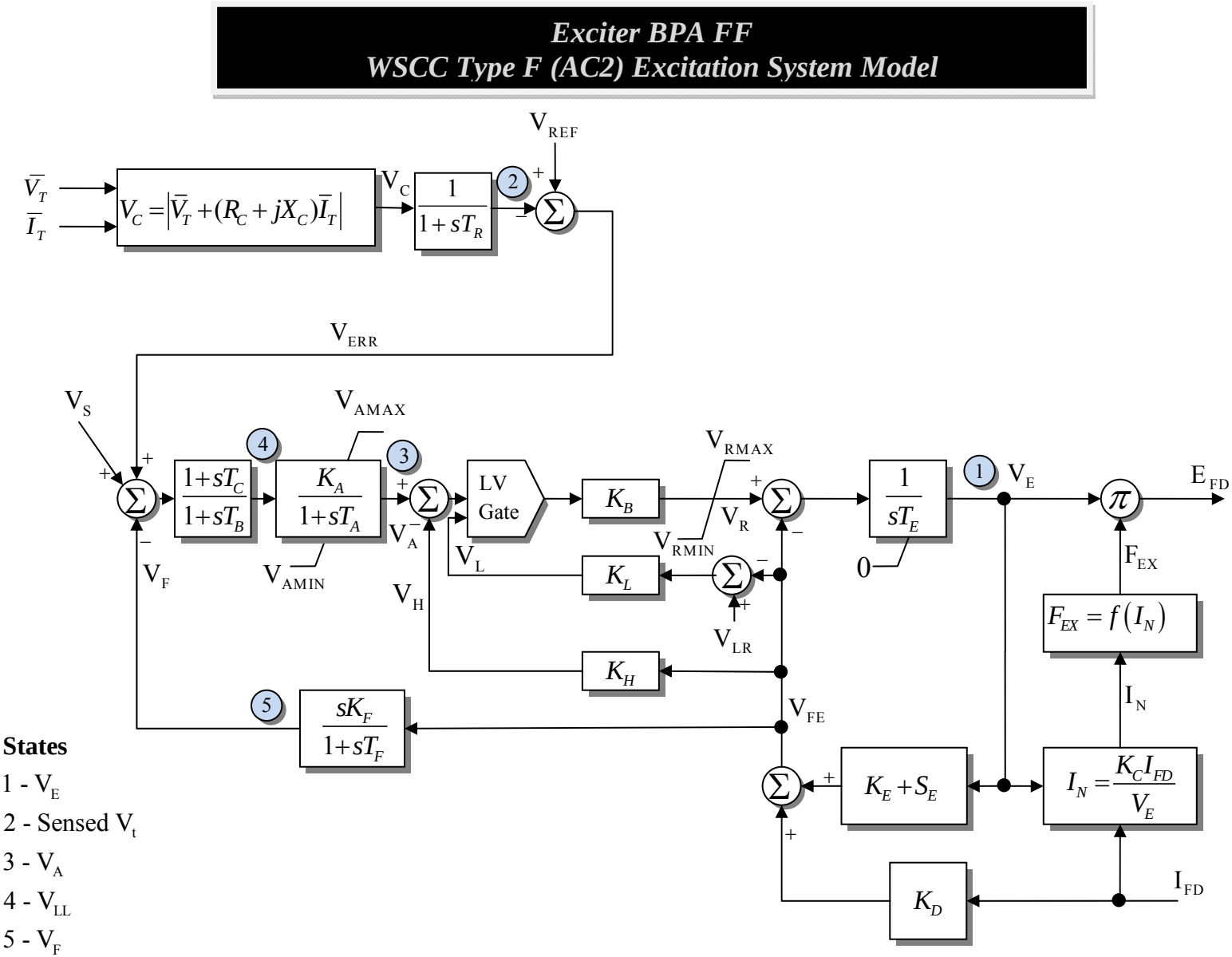

States

1 - V_E

2 - Sensed V_t

3 - V_A

4 - V_{LL}

5 - V_F

Model in the public domain, available from BPA

Exciter BPA FG

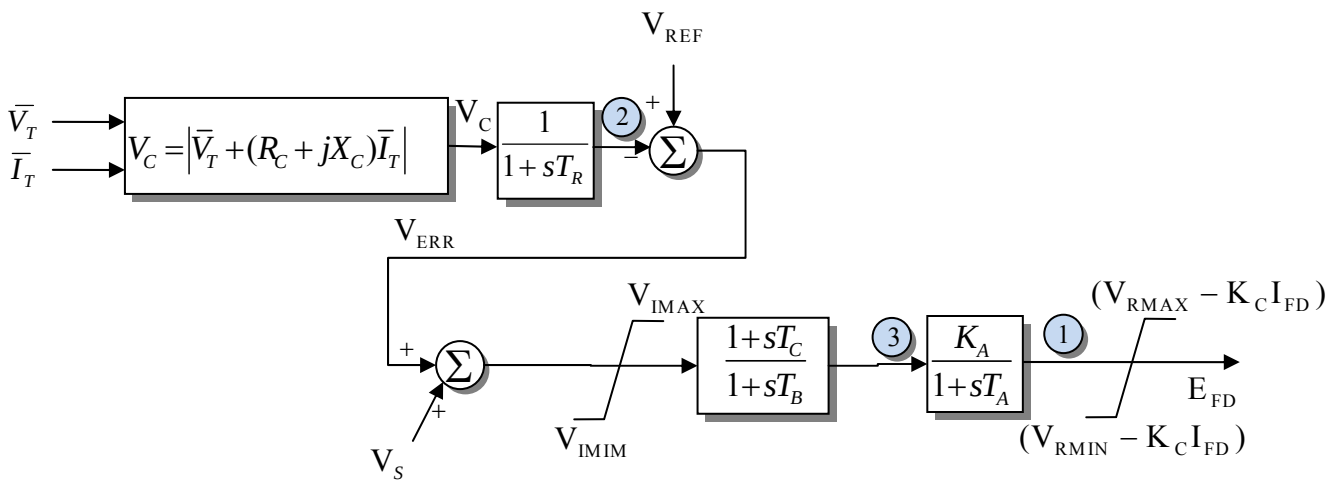

States

1 - EField before limit

2 - Sensed V_t

3 - V_{LL}

Model in the public domain, available from BPA

Exciter BPA FH

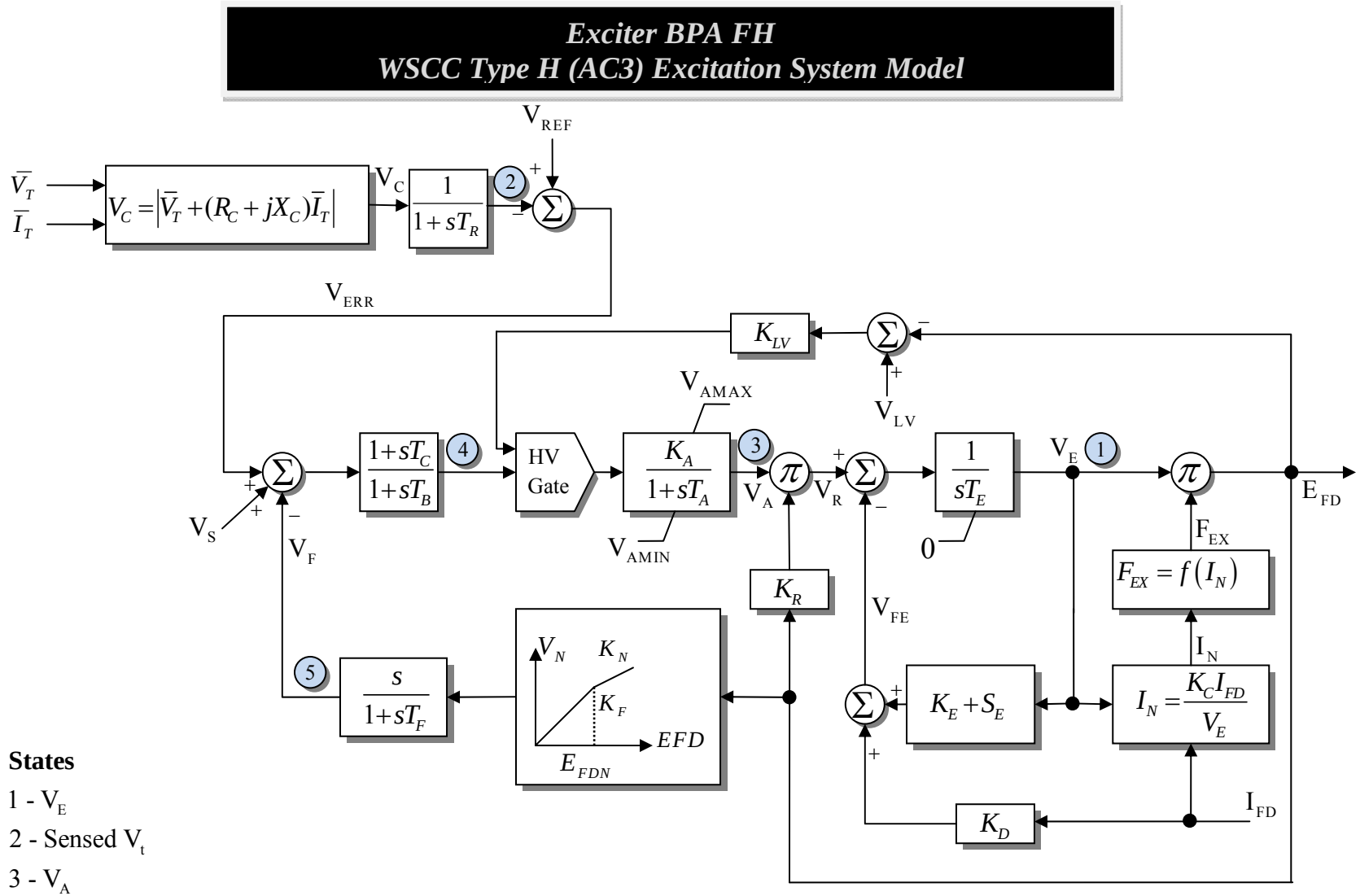

States

1 - V_E

2 - Sensed V_t

3 - V_A

4 - V_{LL}

5 - V_F

Model in the public domain, available from BPA

Exciter BPA FH

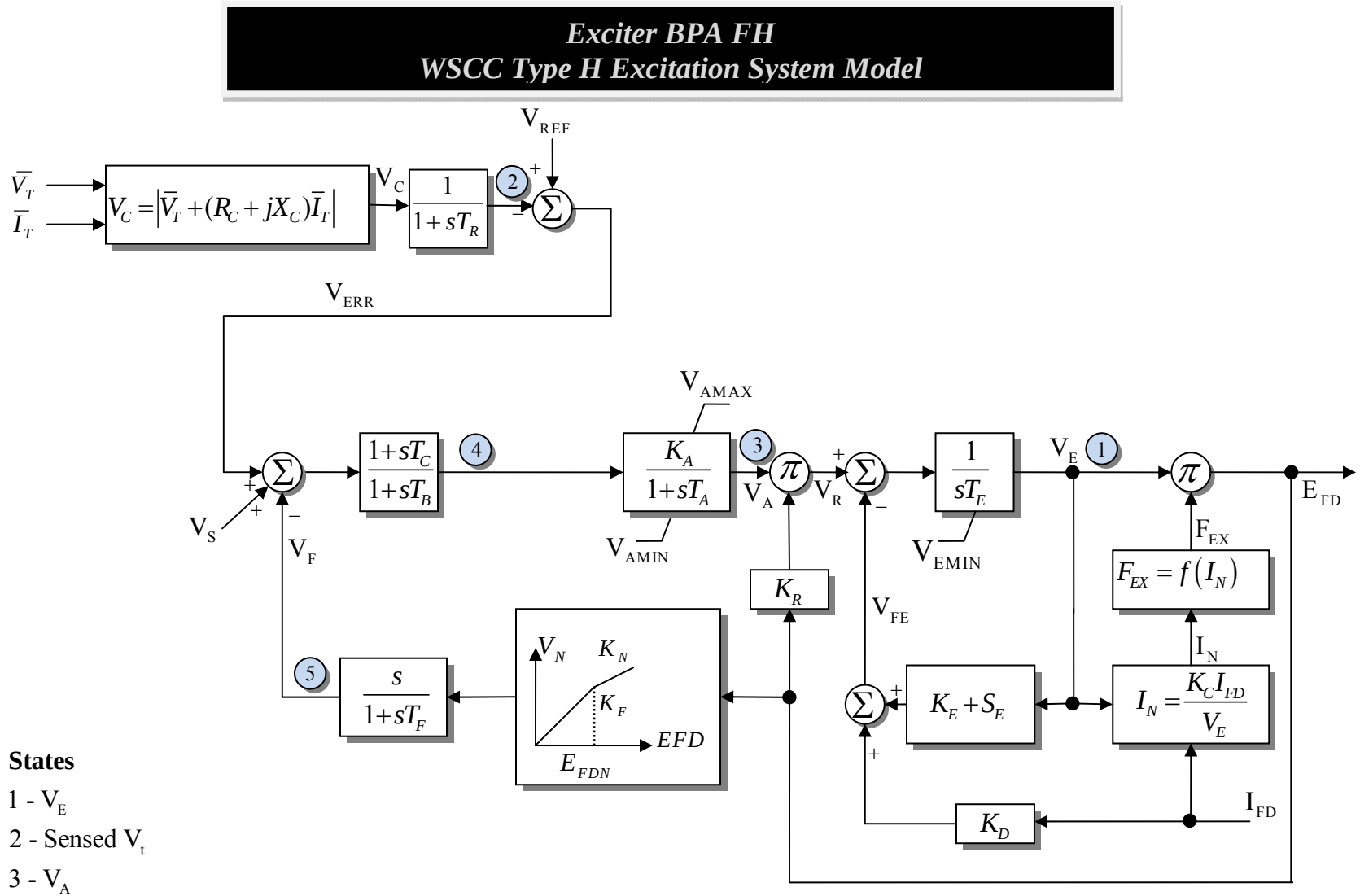

States

1 - V_E

2 - Sensed V_t

3 - V_A

4 - V_{LL}

5 - V_F

Model in the public domain, available from BPA

Exciter BPA FJ

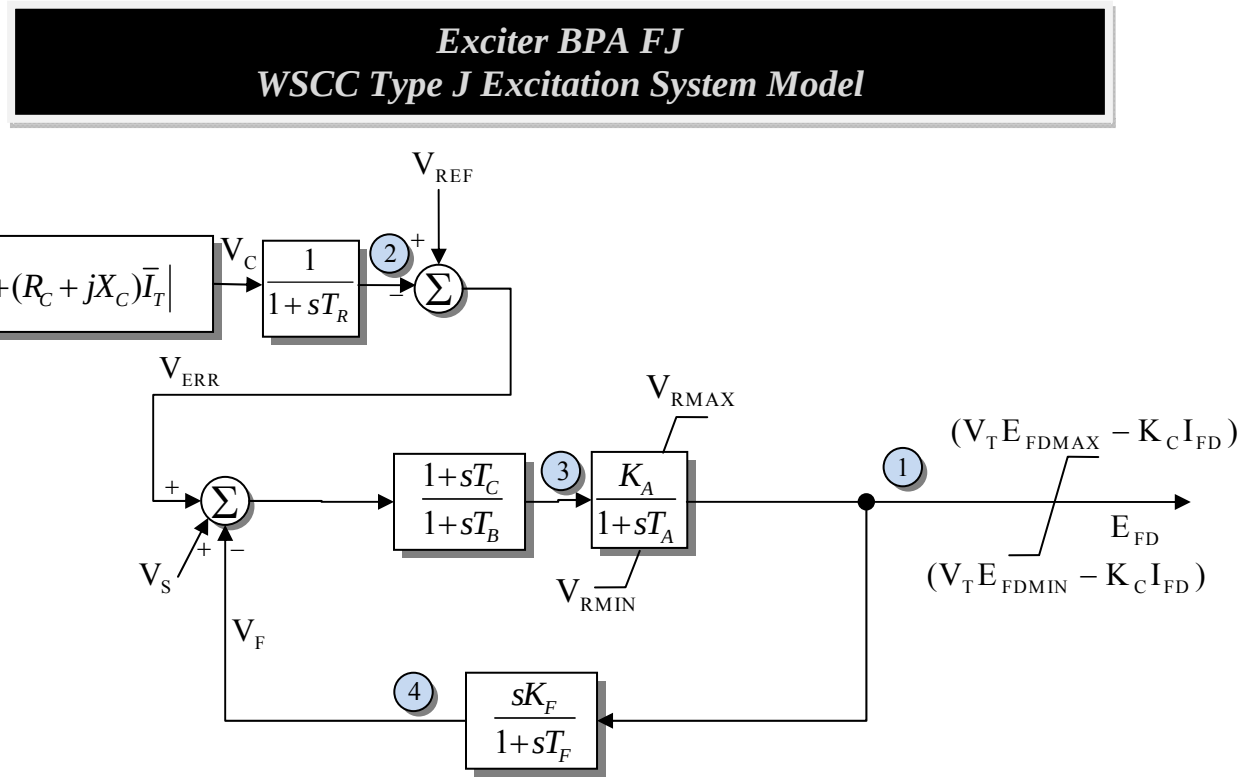

States

1 - EField before limit

2 - Sensed V_t

3 - V_{LL}

4 - V_F

Model in the public domain, available from BPA

Exciter BPA FK

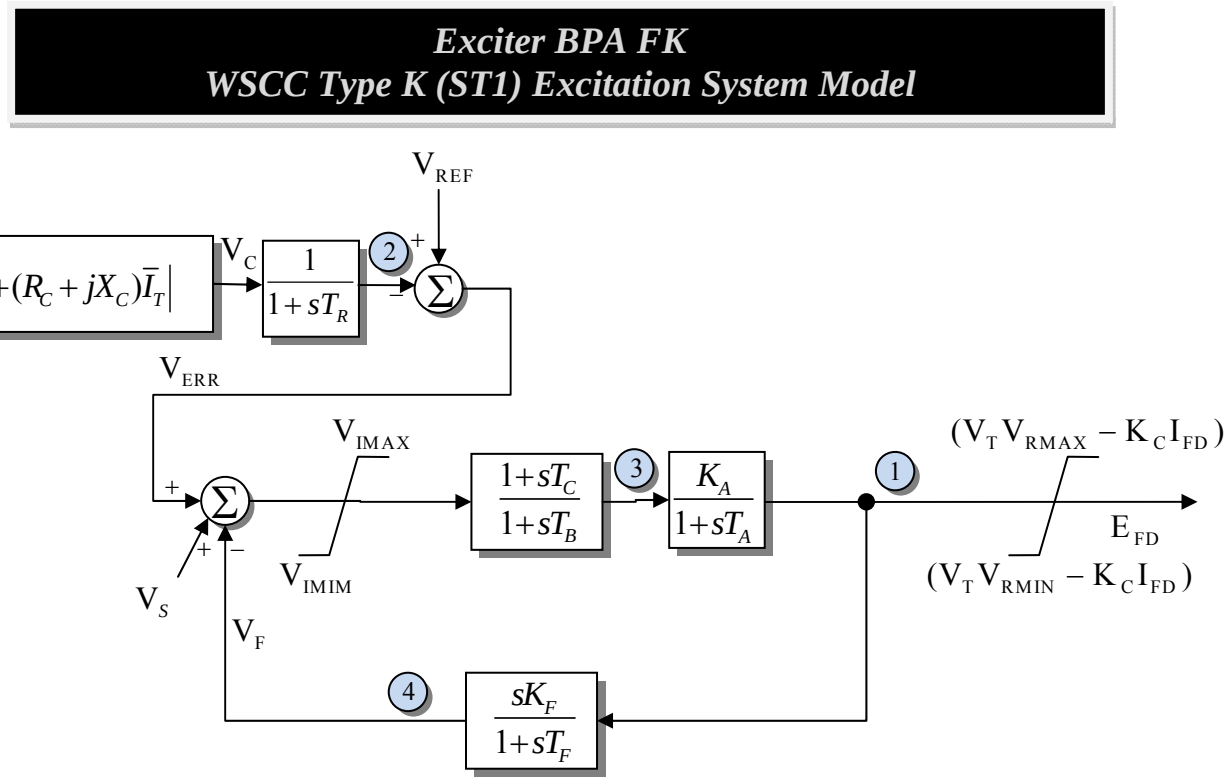

States

1 - EField before limit

2 - Sensed V_t

3 - V_{LL}

4 - V_F

Model in the public domain, available from BPA

Exciter BPA FL

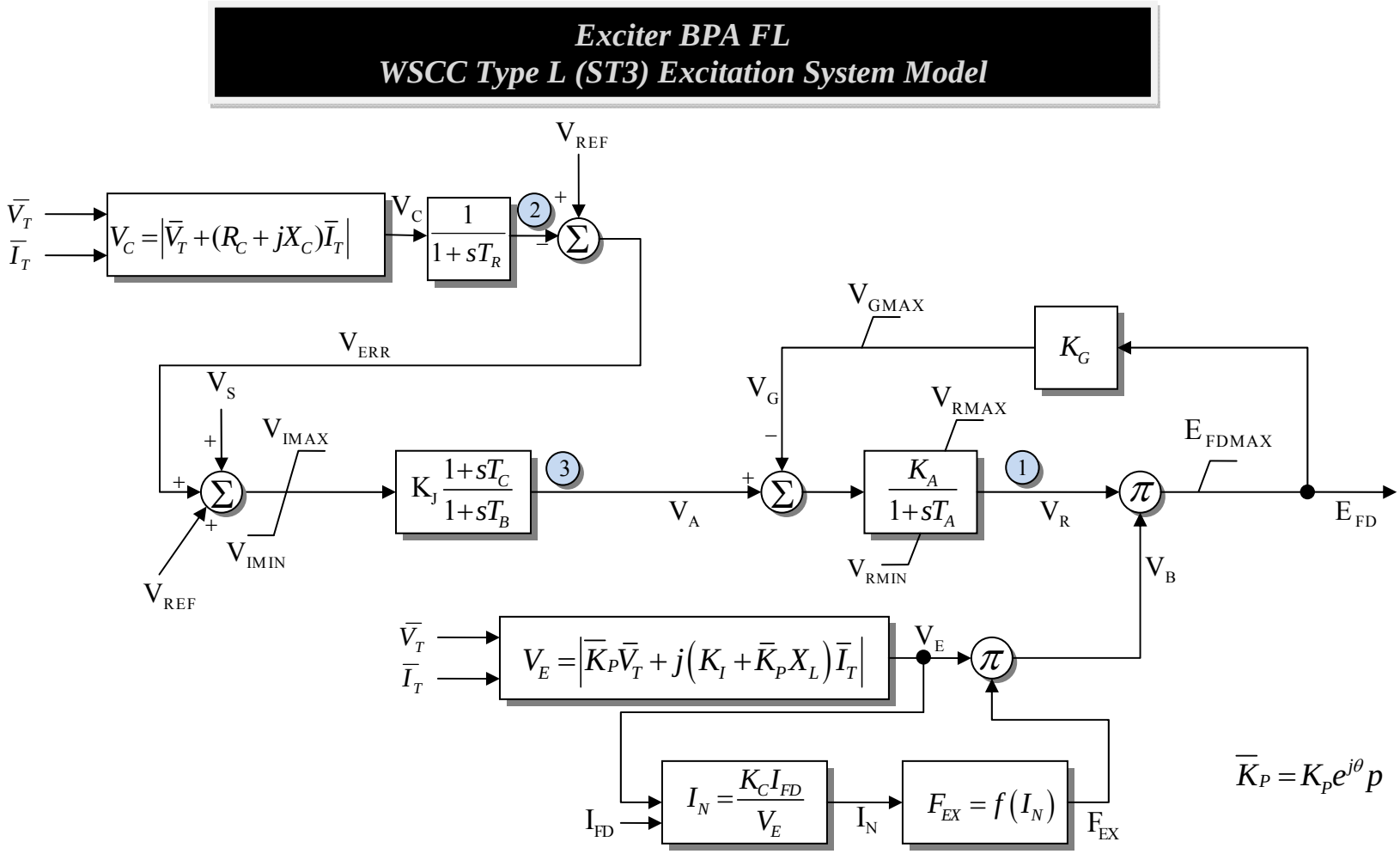

States

1 - V_M

2 - Sensed V_t

3 - V_{LL}

Model in the public domain, available from BPA

Exciter BPA FM through BPA FV

Exciter BPA FM through BPA FV

No block diagrams have been created

Exciter DC4B

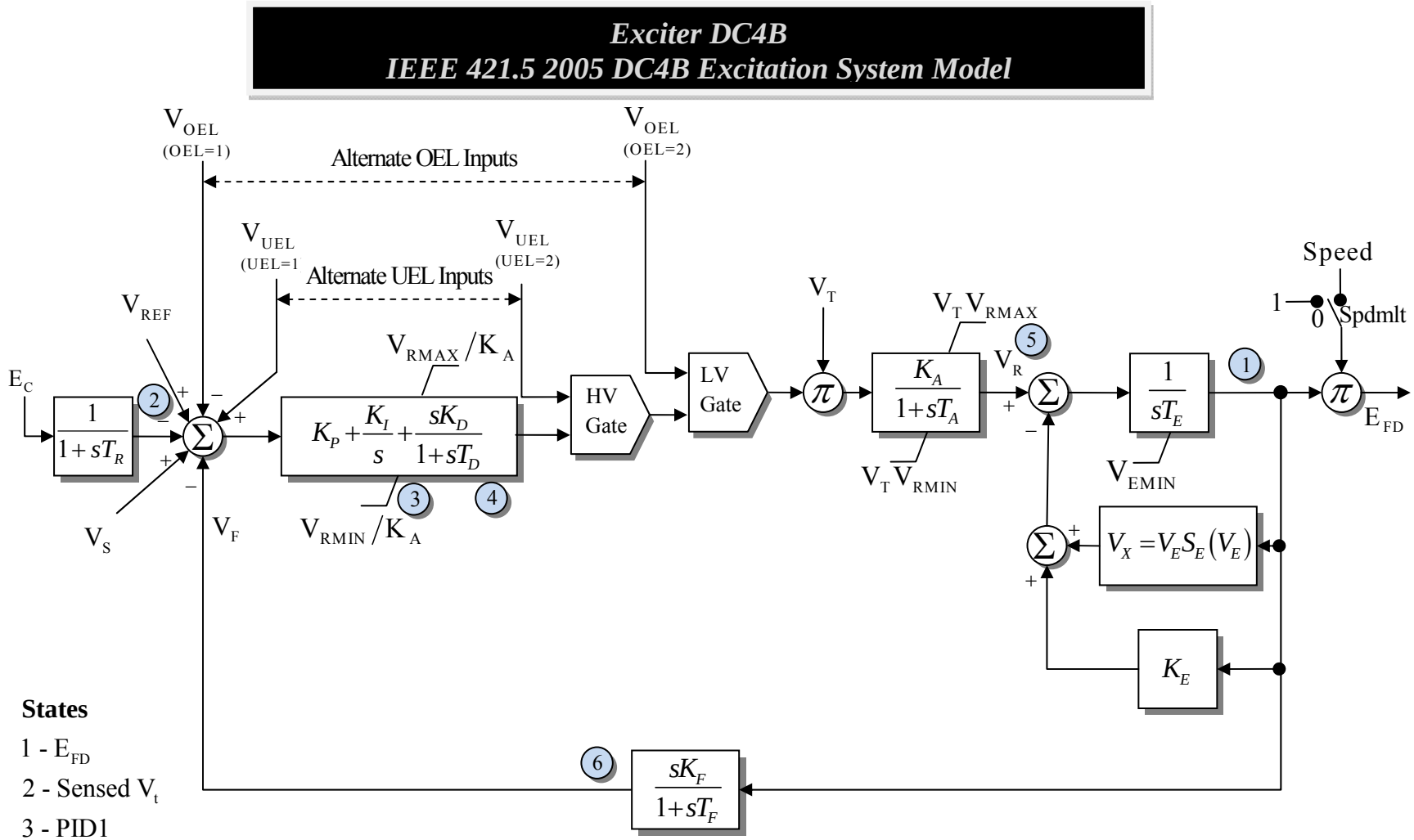

States

1 - E_{FD}

2 - Sensed V_t

3 - PID1

4 - PID2

5 - V_R

6 - Feedback

Model supported by PSSE

Model supported by PSLF with optional speed multiplier

Exciter ESAC1A

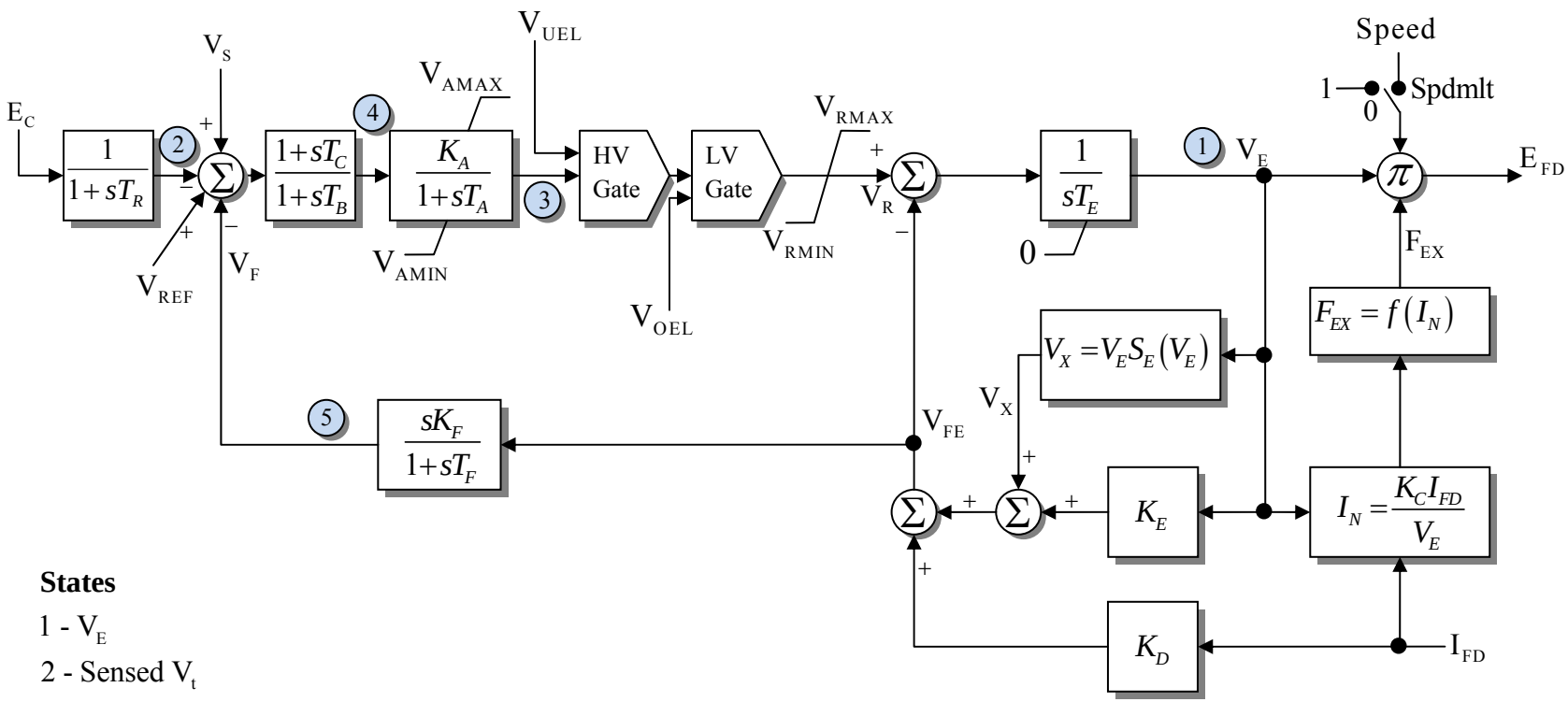

States

1 - V_E

2 - Sensed V_t

3 - V_A

4 - V_{LL}

5 - V_F

Model supported by PSSE

Model supported by PSLF with optional speed multiplier

Exciter ESAC2A

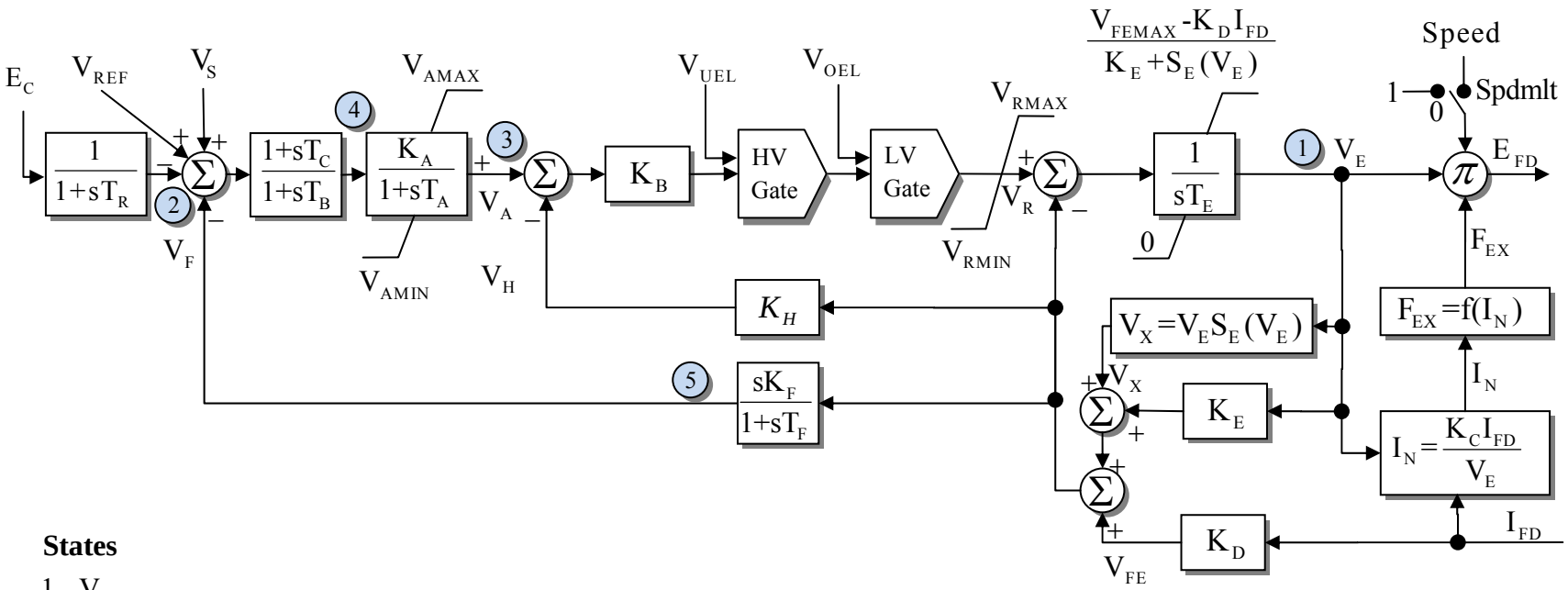

States

1 - V_E

2 - Sensed V_t

3 - V_A

4 - V_{LL}

5 - V_F

Model supported by PSSE

Model supported by PSLF with optional speed multiplier

Exciter ESAC3A

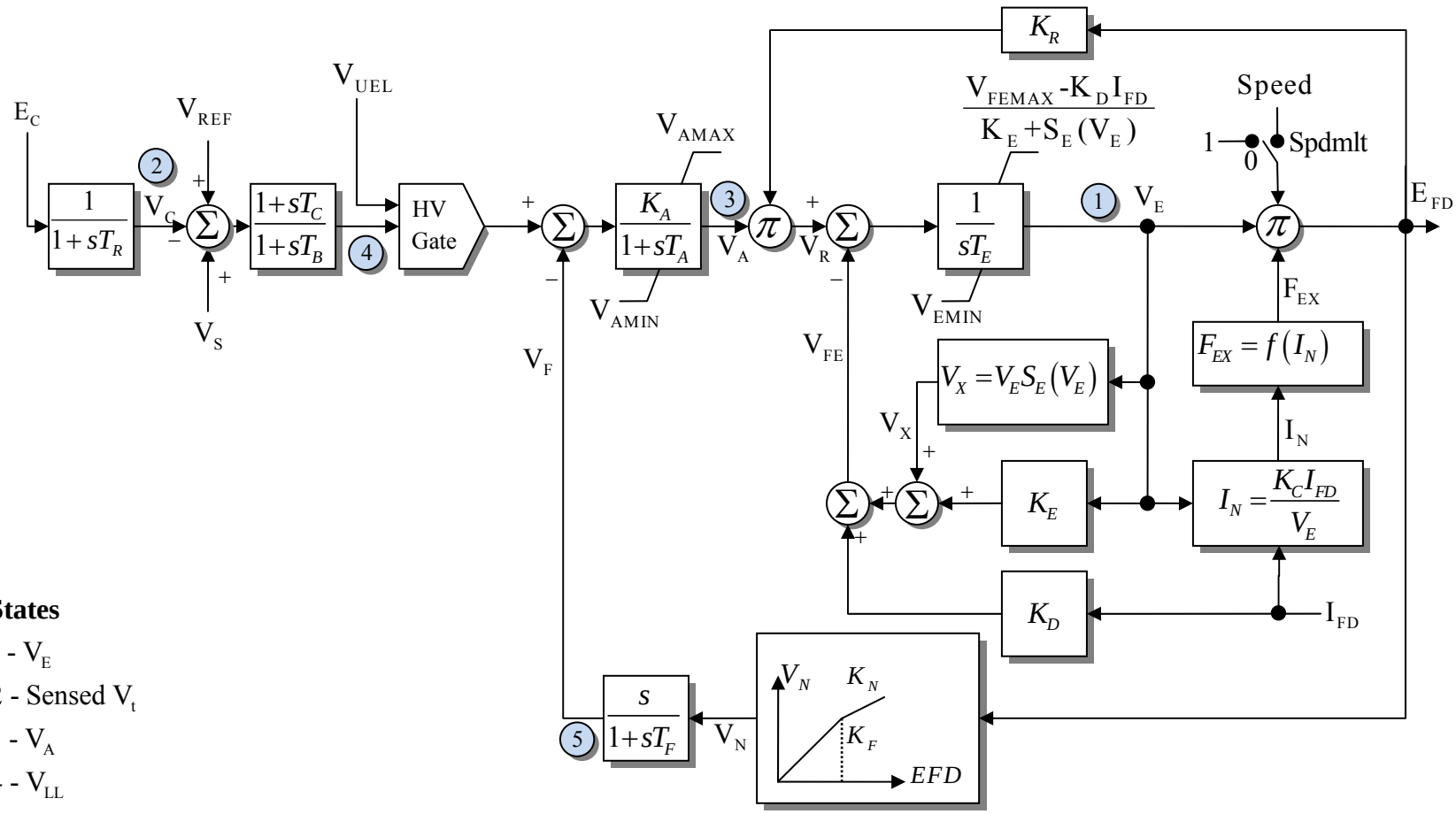

States

1 - V_E

2 - Sensed V_t

3 - V_A

4 - V_{LL}

5 - V_F

Model supported by PSSE

Model supported by PSLF with optional speed multiplier

Exciter ESAC4A

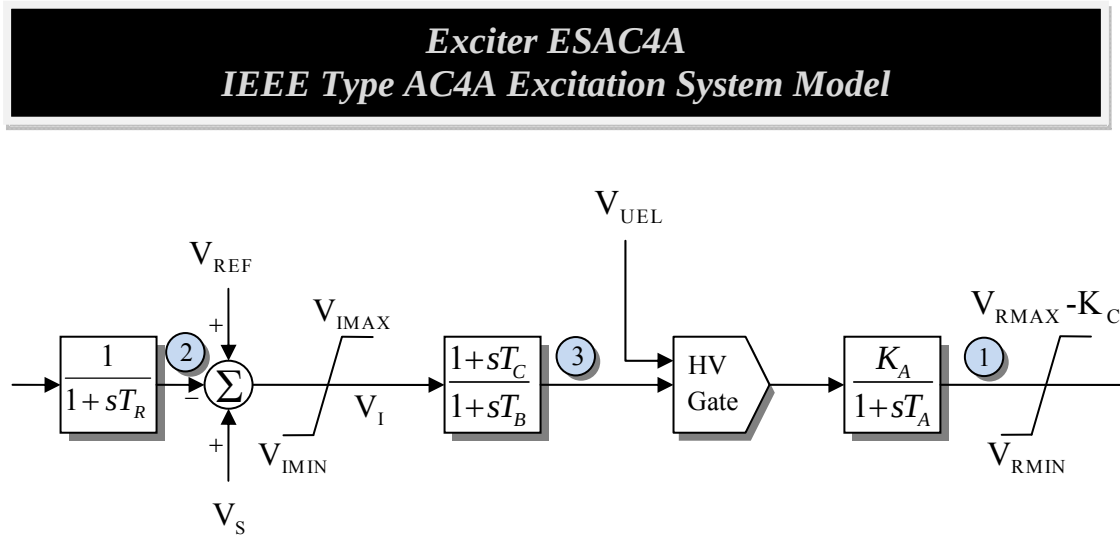

States

1 - EField before limit

2 - Sensed V_t

3 - V_{LL}

Model supported by PSLF and PSSE

PSSE uses nonwindup limit on E_{FD}

Exciter ESAC5A

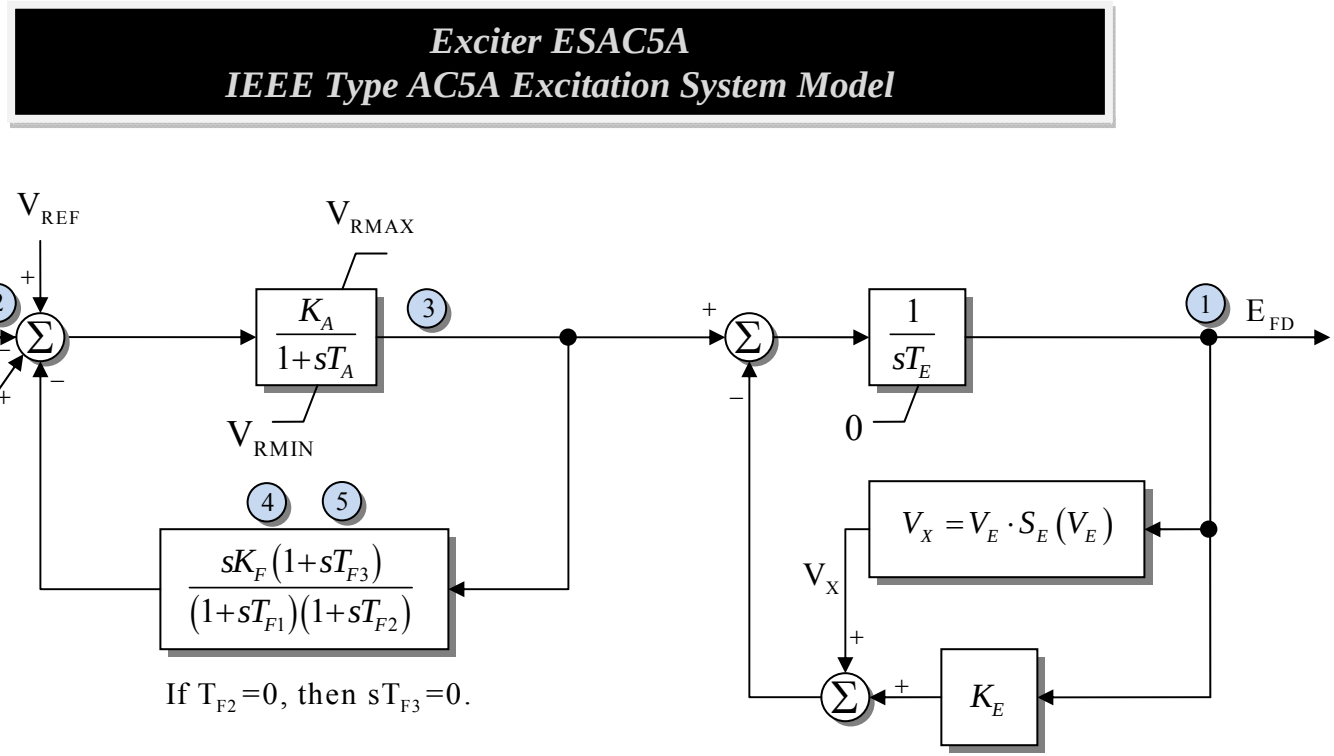

States

1 - EField

2 - Sensed V_t

3 - V_R

4 - Feedback 1

5 - Feedback 2

Model supported by PSLF and PSSE

Exciter ESAC6A

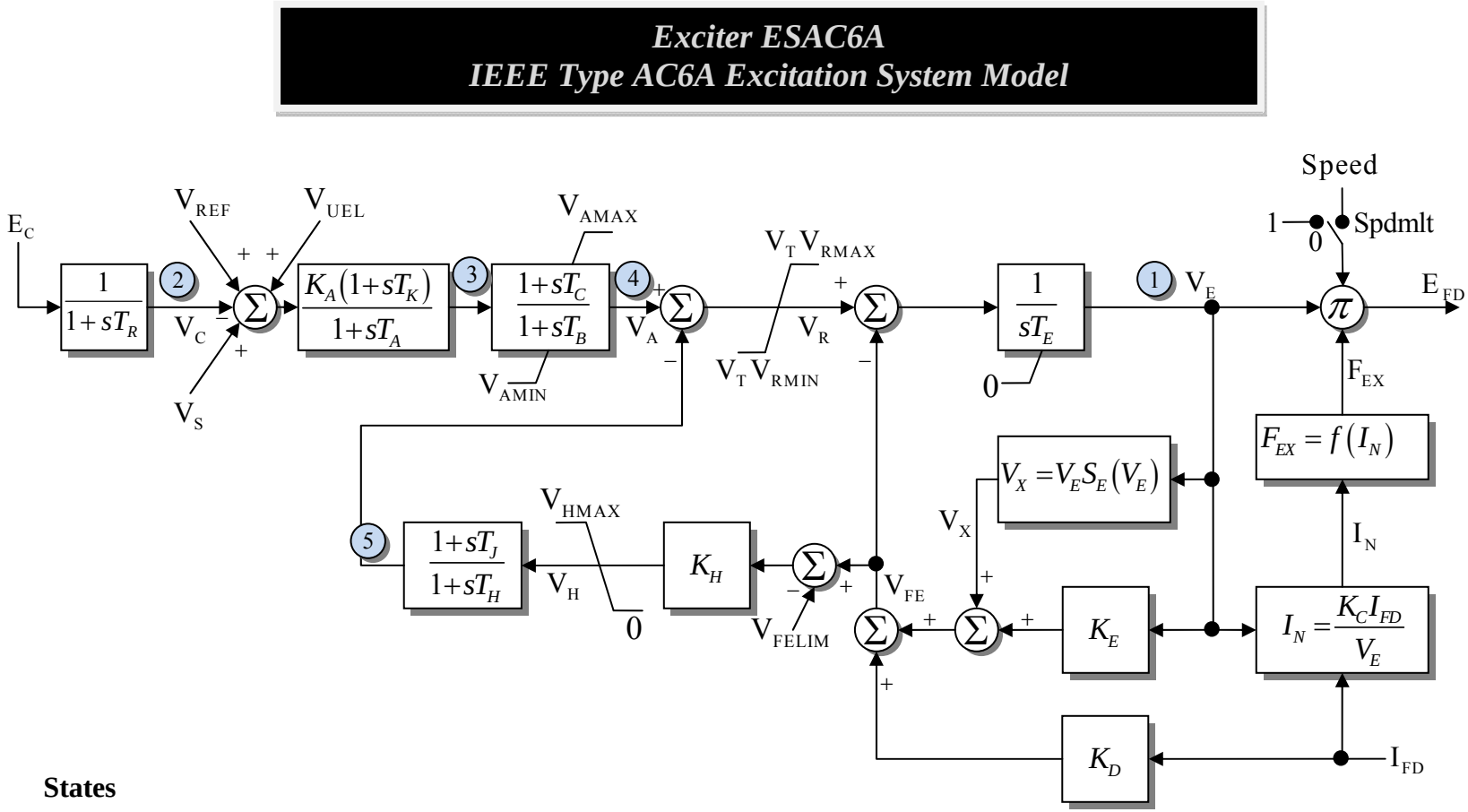

States

1 - V_E

2 - Sensed V_t

3 - T_A Block

4 - V_{LL}

5 - V_F

Model supported by PSSE

Model supported by PSLF with optional speed multiplier

Exciter ESAC8B_GE

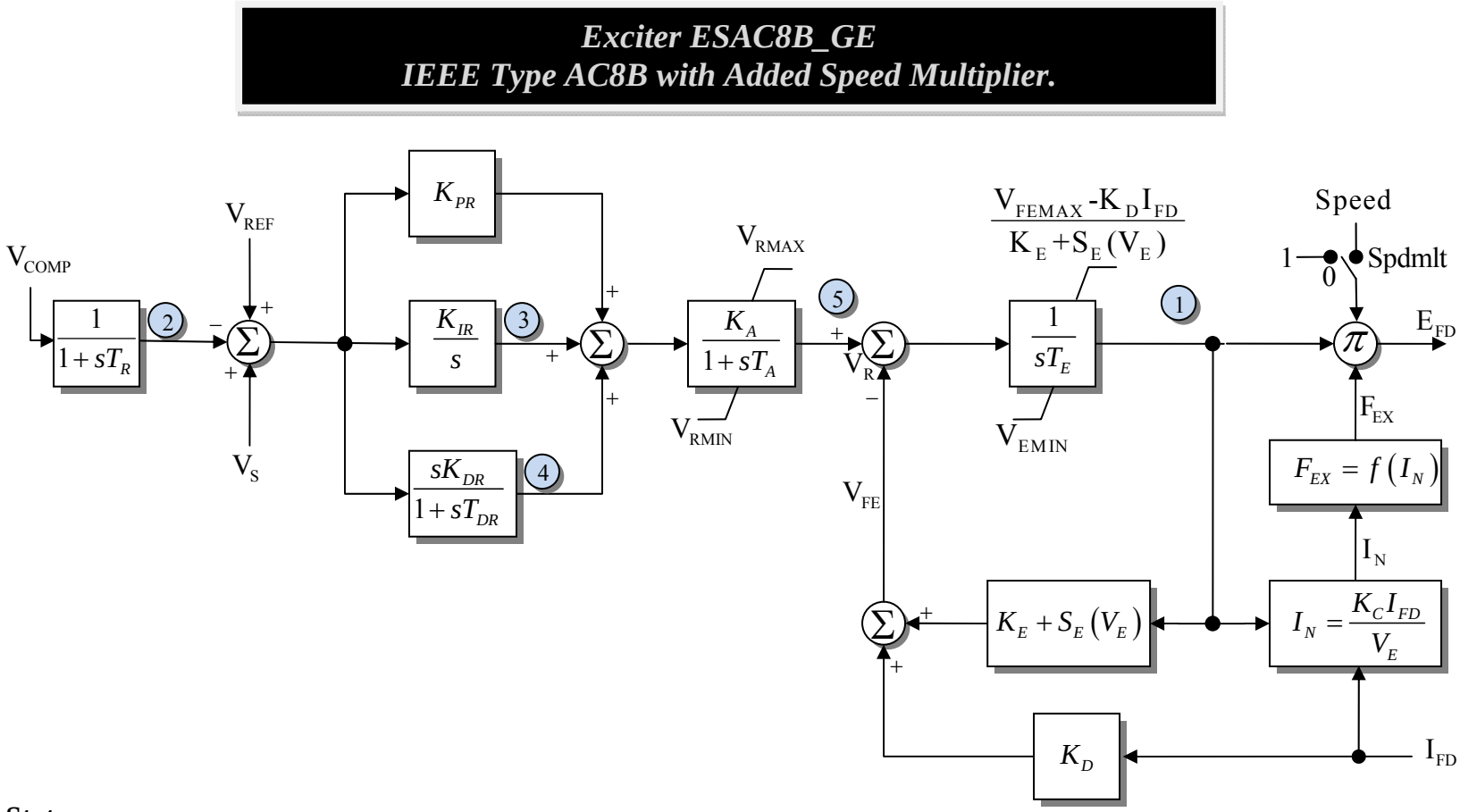

States

1 - V_E

2 - Sensed V_t

3 - PID 1

4 - PID 2

5 - V_R

Model supported by PSLF

If V_{TMULT} <> 0, $V_{RMAX} = V_T \square V_{RMAX}$ and $V_{RMIN} = V_T \square V_{RMIN}$

Exciter ESAC8B_PTI

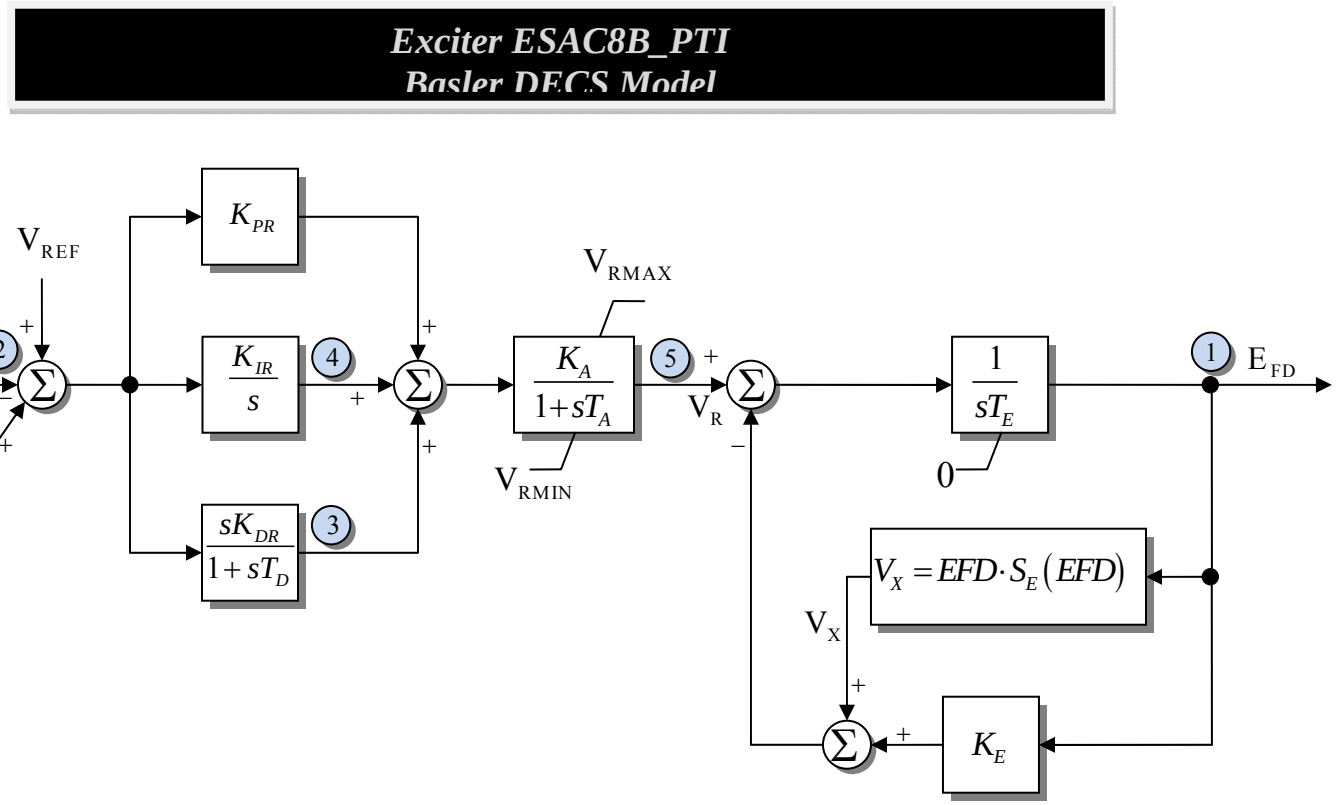

States

1 - E_{FD}

2 - Sensed V_t

3 - Derivative Controller

4 - Integral Controller

5 - V_R

Model supported by PSSE

Exciter ESDC1A

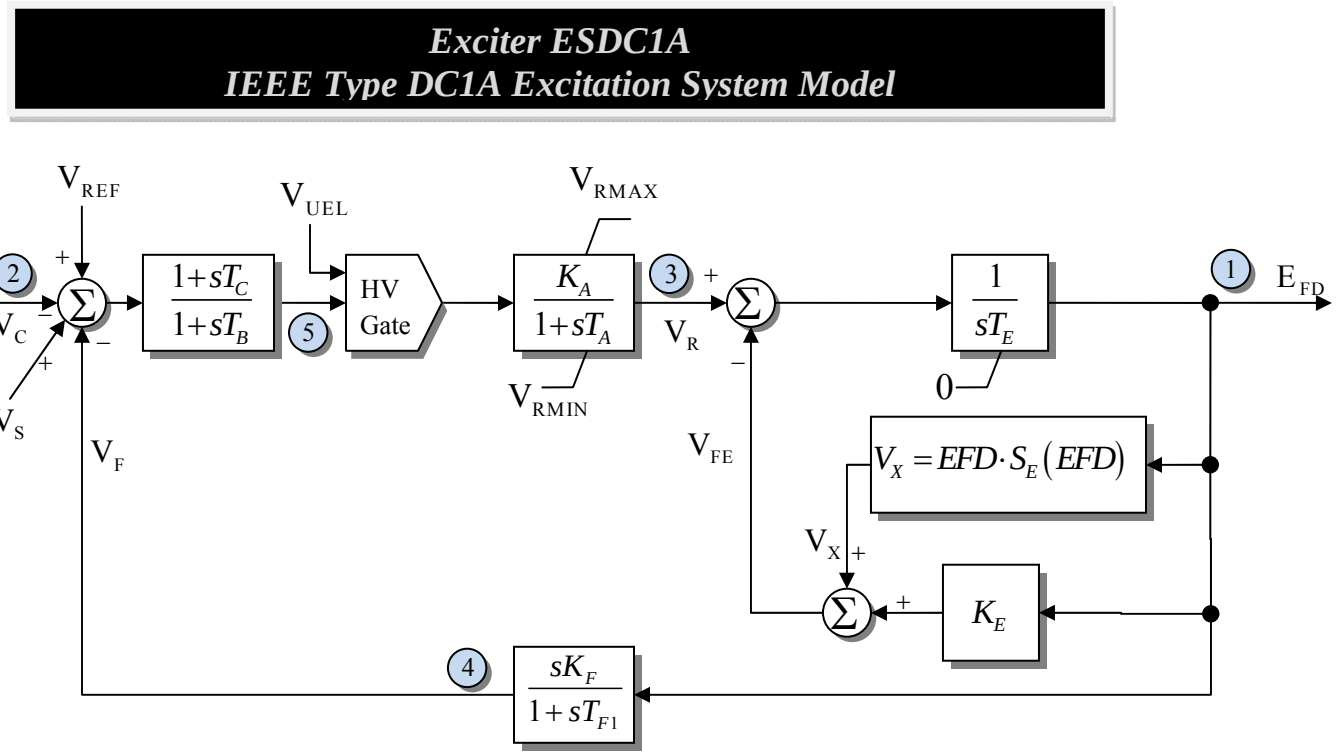

States

1 - E_{FD}

2 - Sensed V_t

3 - V_R

4 - V_F

5 - Lead-Lag

Model supported by PSSE

Model supported by PSLF includes spdmlt, exclim, and UEL inputs that are read but not utilized in the Simulator implementation

Exciter ESDC2A

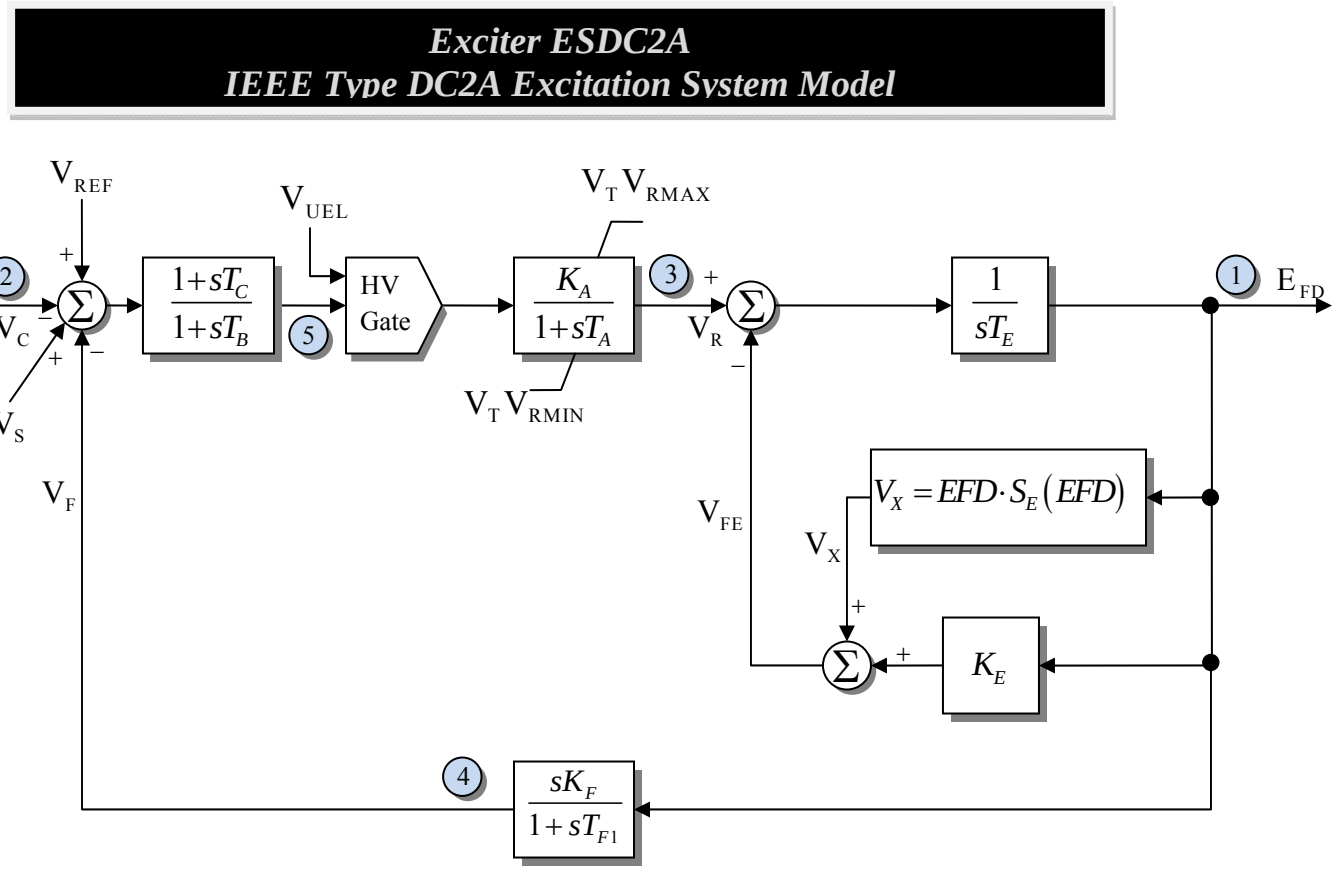

States

1 - E_{FD}

2 - Sensed V_t

3 - V_R

4 - V_F

5 - Lead-Lag

Model supported by PSSE

Model supported by PSLF includes spdmlt, exclim, and UEL inputs that are read but not utilized in Simulator

Exciter ESDC3A

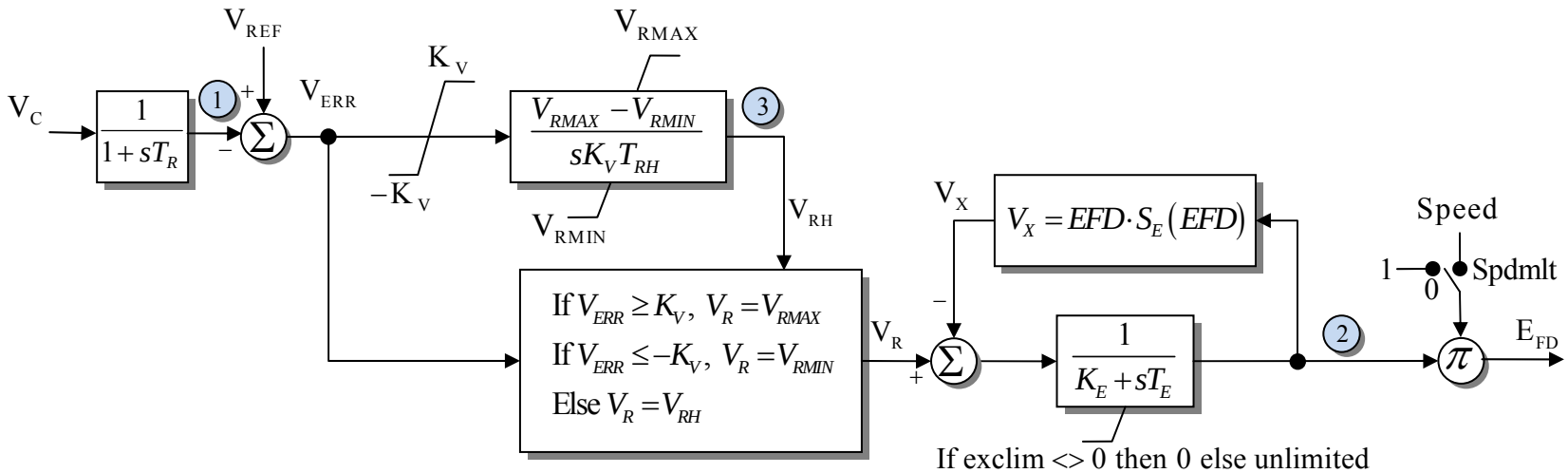

States

1 - EField

2 - Sensed V_t

3 - V_{RH}

Model supported by PSLF

Exciter ESST1A

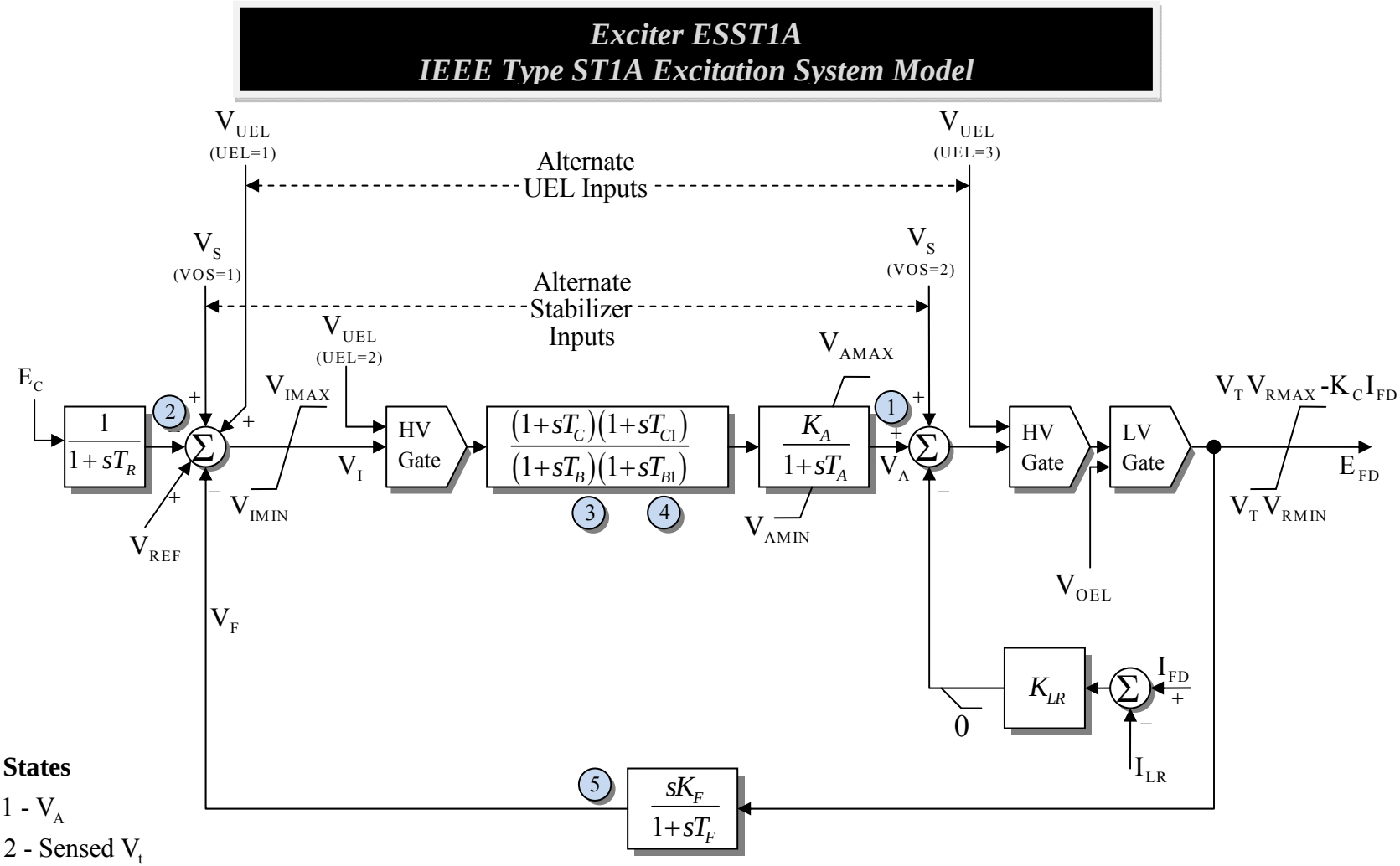

States

1 - V_A

2 - Sensed V_t

3 - LL

4 - LL1

5 - Feedback

Model supported by PSLF and PSSE

Exciter ESST2A

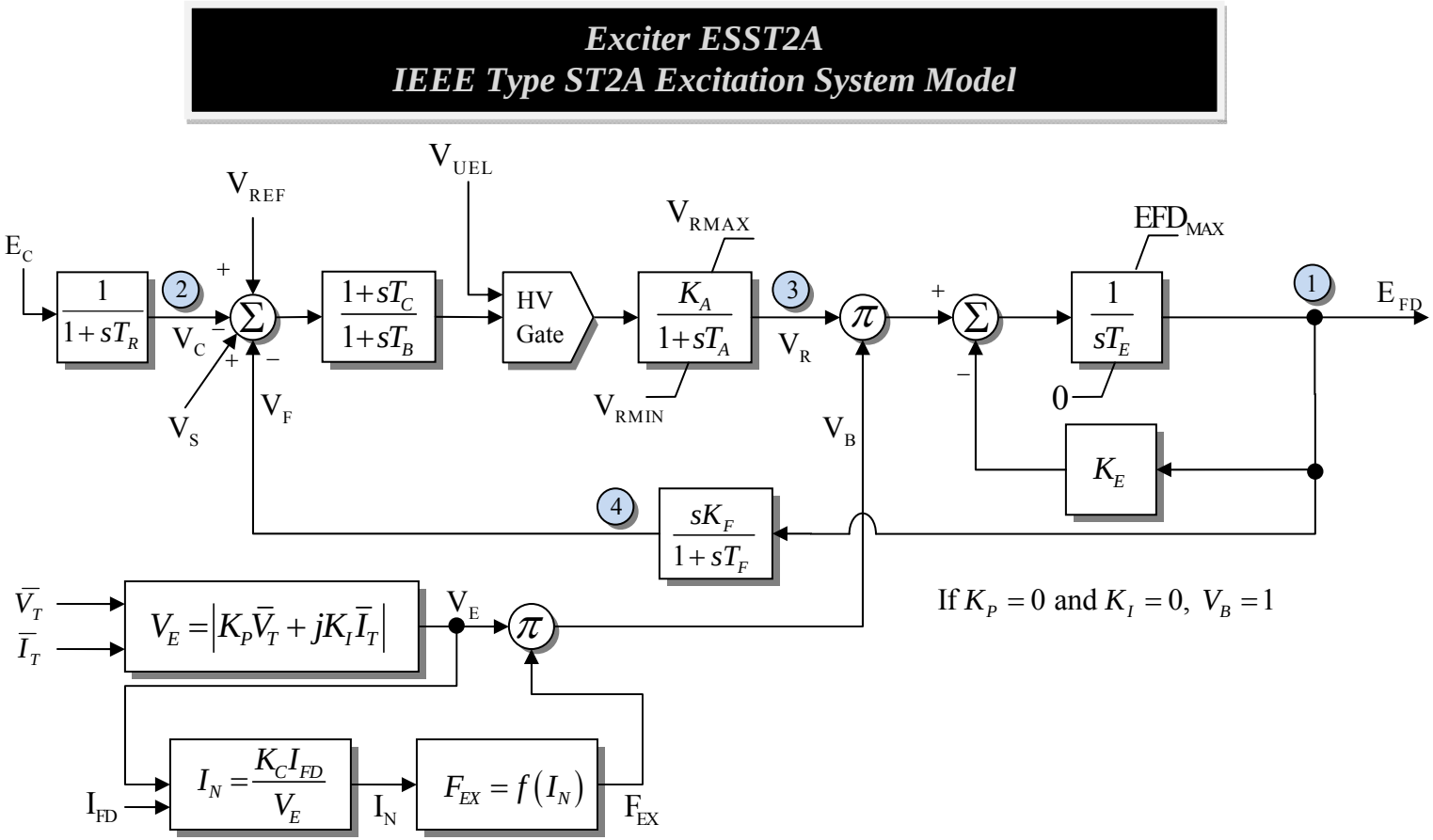

States

1 - E_{FD}

2 - Sensed V_t

3 - V_R

4 - V_F

Model supported by PSSE

Model supported by PSLF includes UEL input that is read but not utilized in Simulator

Exciter ESST3A

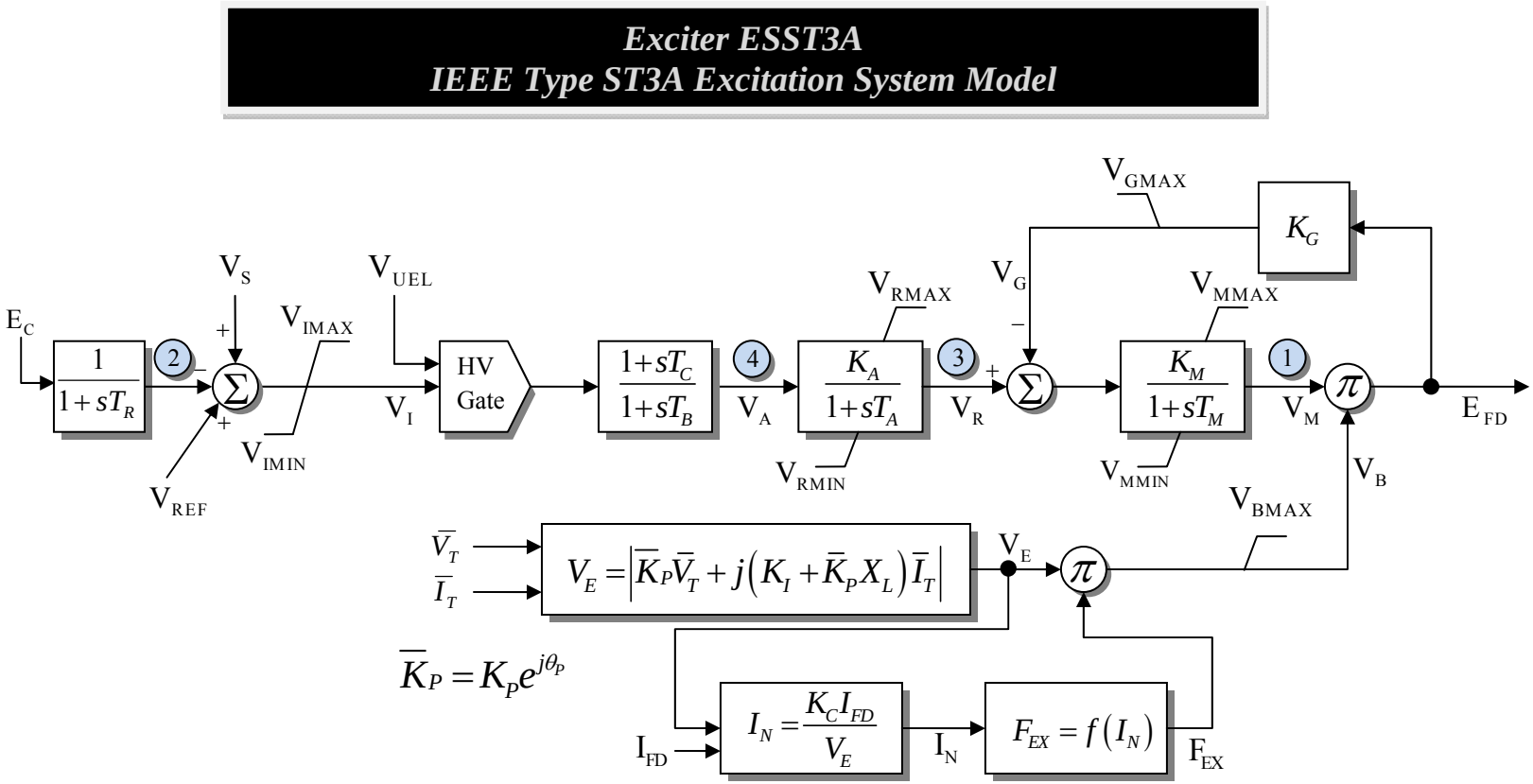

States

1 - V_M

2 - Sensed V_t

3 - V_R

4 - LL

Model supported by PSLF and PSSE

Exciter ESST4B

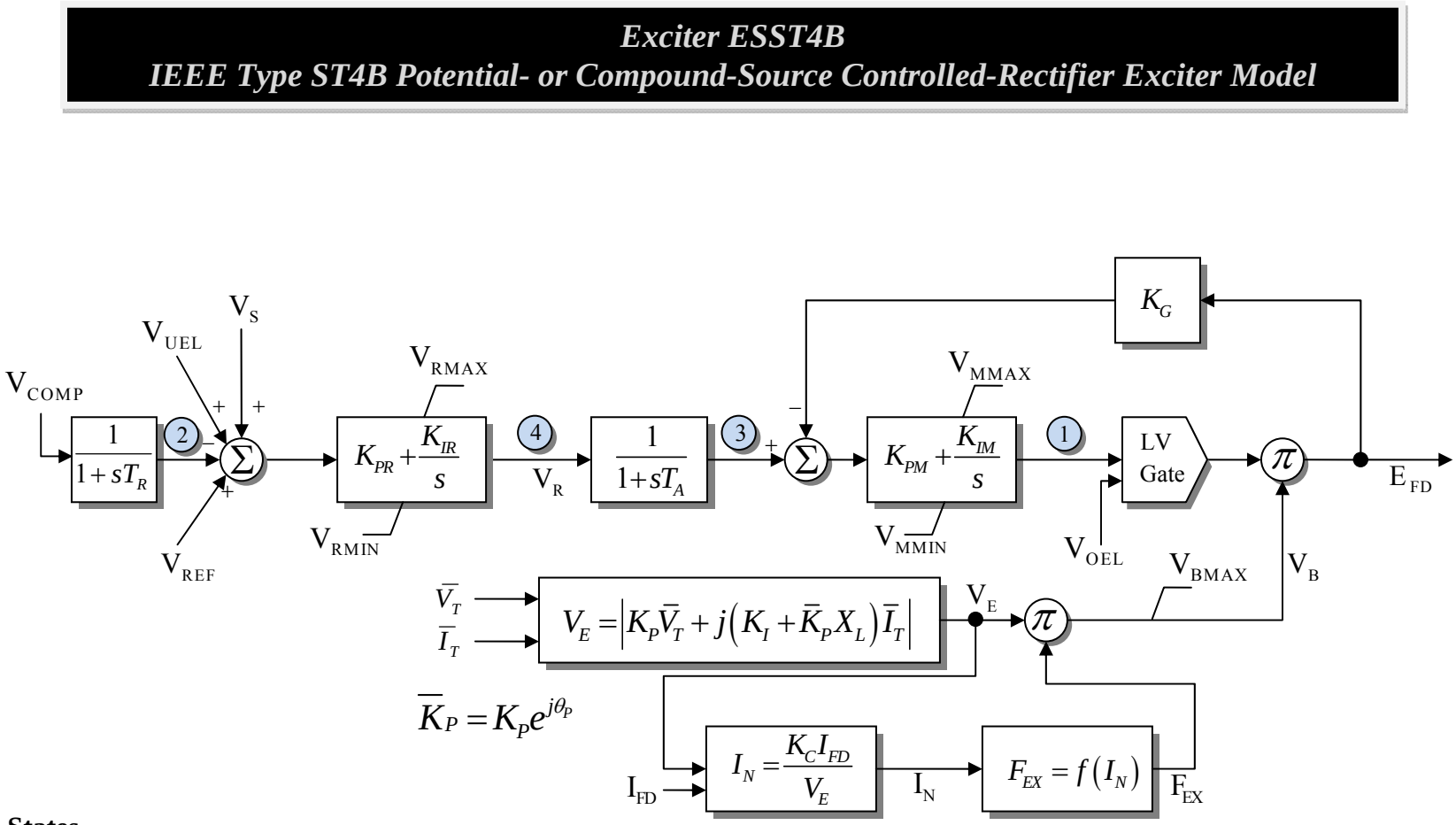

States

1 - V_M

2 - Sensed V_t

3 - V_A

4 - V_R

Model supported by PSSE

Model supported by PSLF includes V_{GMAX} input that is read but not utilized in Simulator

Exciter EWTGFC

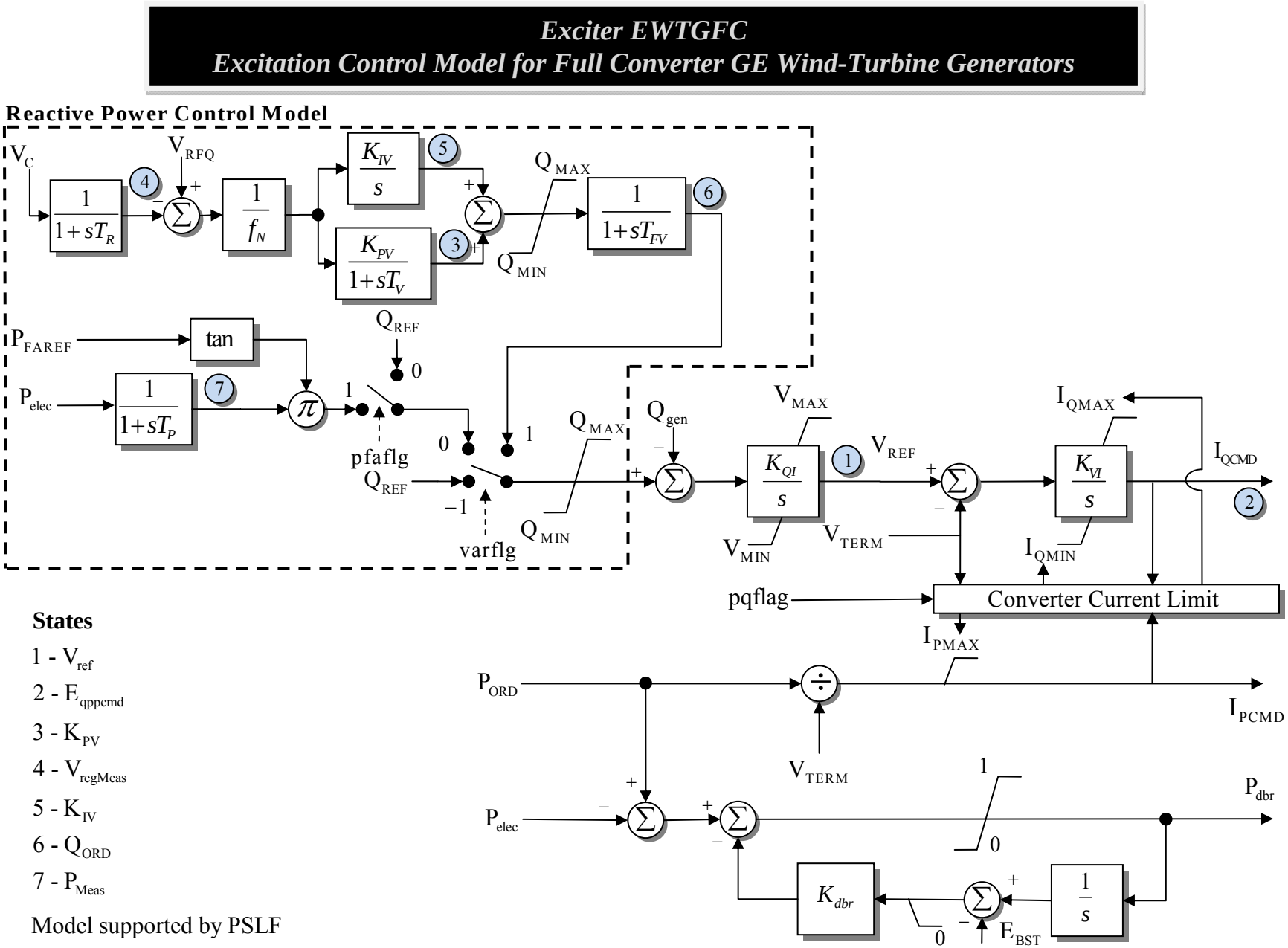

States

1 - V_{ref}

2 - E_{qppcmd}

3 - K_{PV}

4 - $V_{regMeas}$

5 - K_{IV}

6 - Q_{ORD}

7 - P_{Meas}

Model supported by PSLF

Exciter EX2000

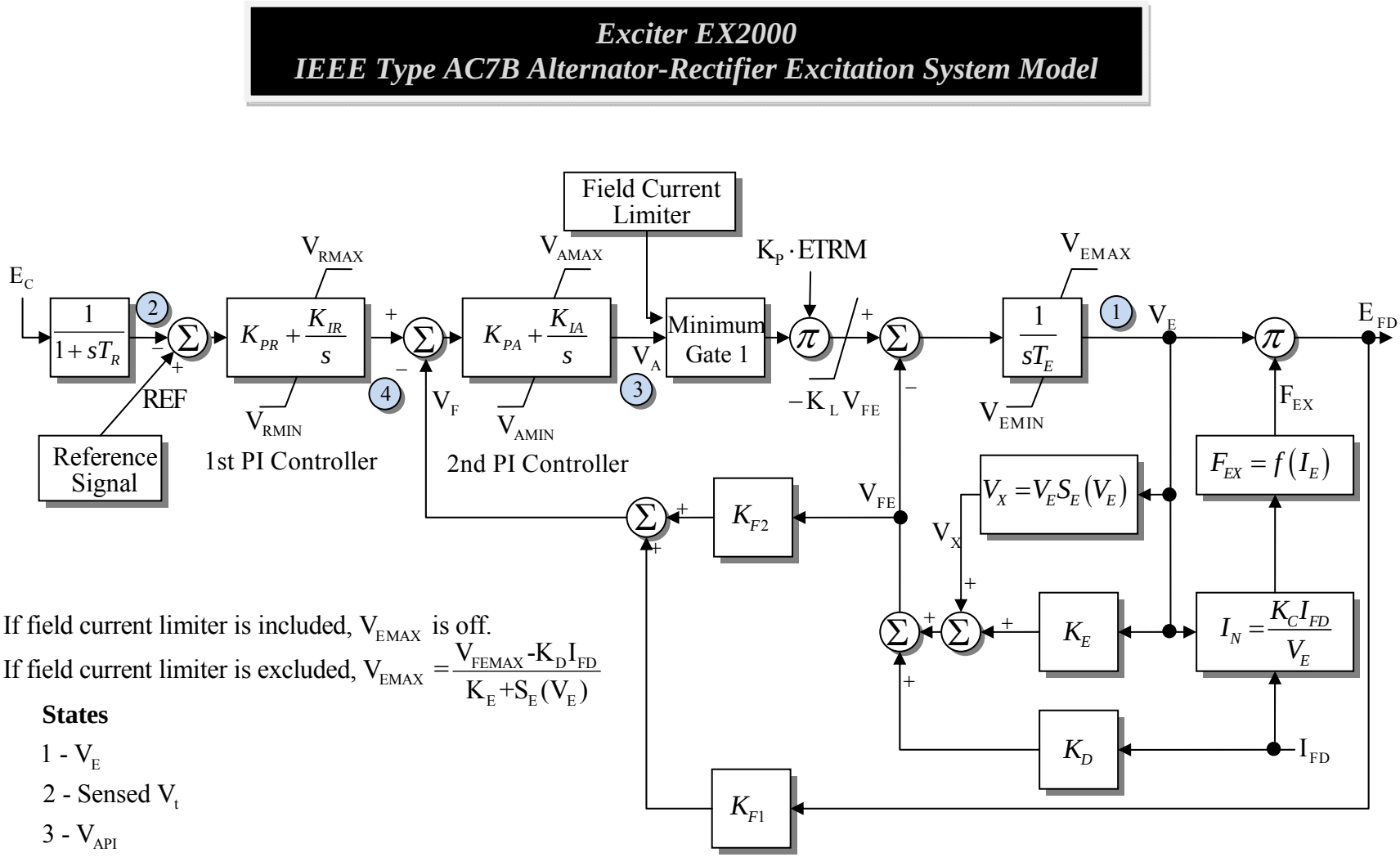

If field current limiter is included, V_{EMAX} is off.

If field current limiter is excluded, $V_{EMAX} = \frac{V_{FEMAX} - K_D I_{FD}}{K_E + S_E(V_E)}$

States

1 - V_E

2 - Sensed V_t

3 - V_{API}

4 - V_{RPI}

5 - LL

6 - IFD_{PI}

Model supported by PSSE

Exciter EX2000 REFERENCE SIGNAL MODEL

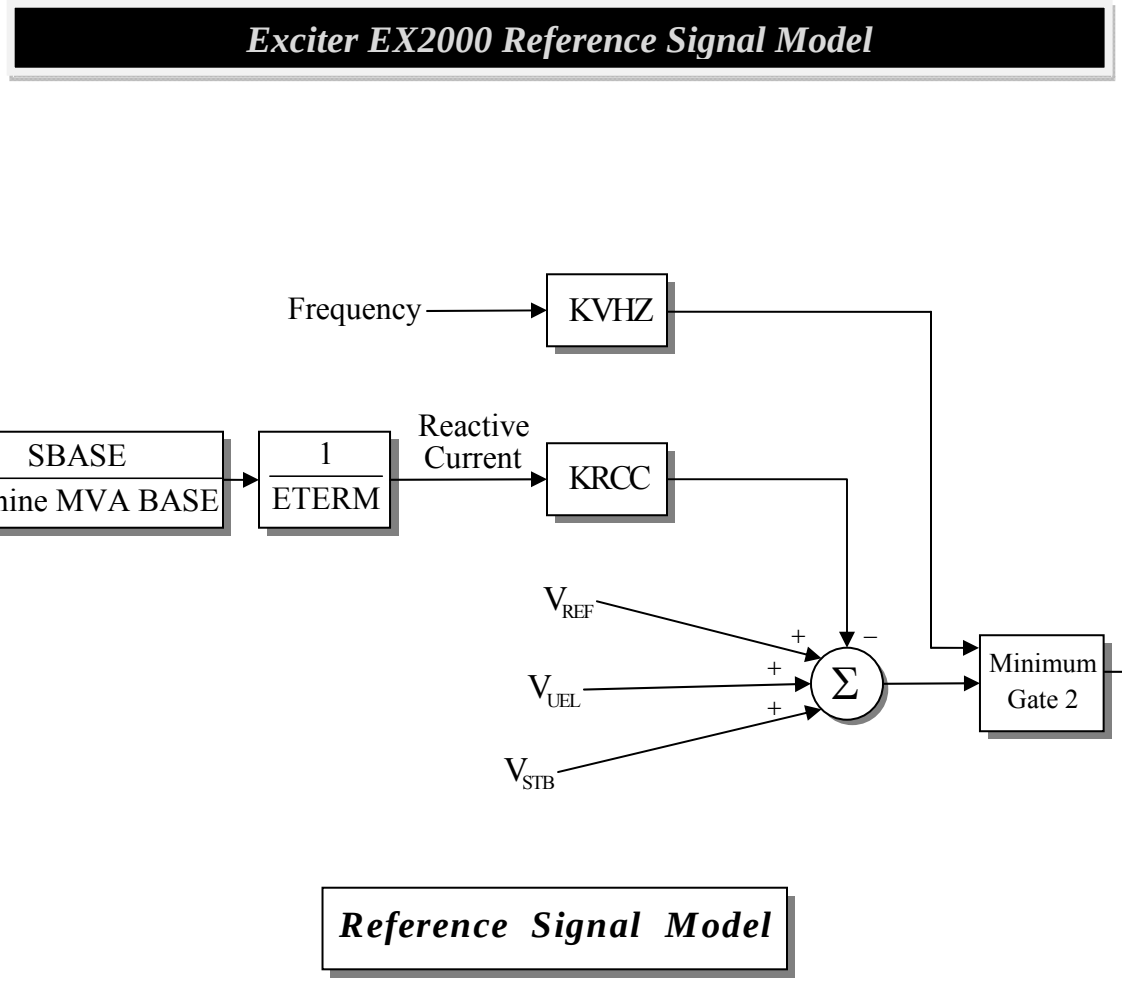

Model supported by PSSE

Exciter EX2000 FIELD CURRENT LIMITER MODEL

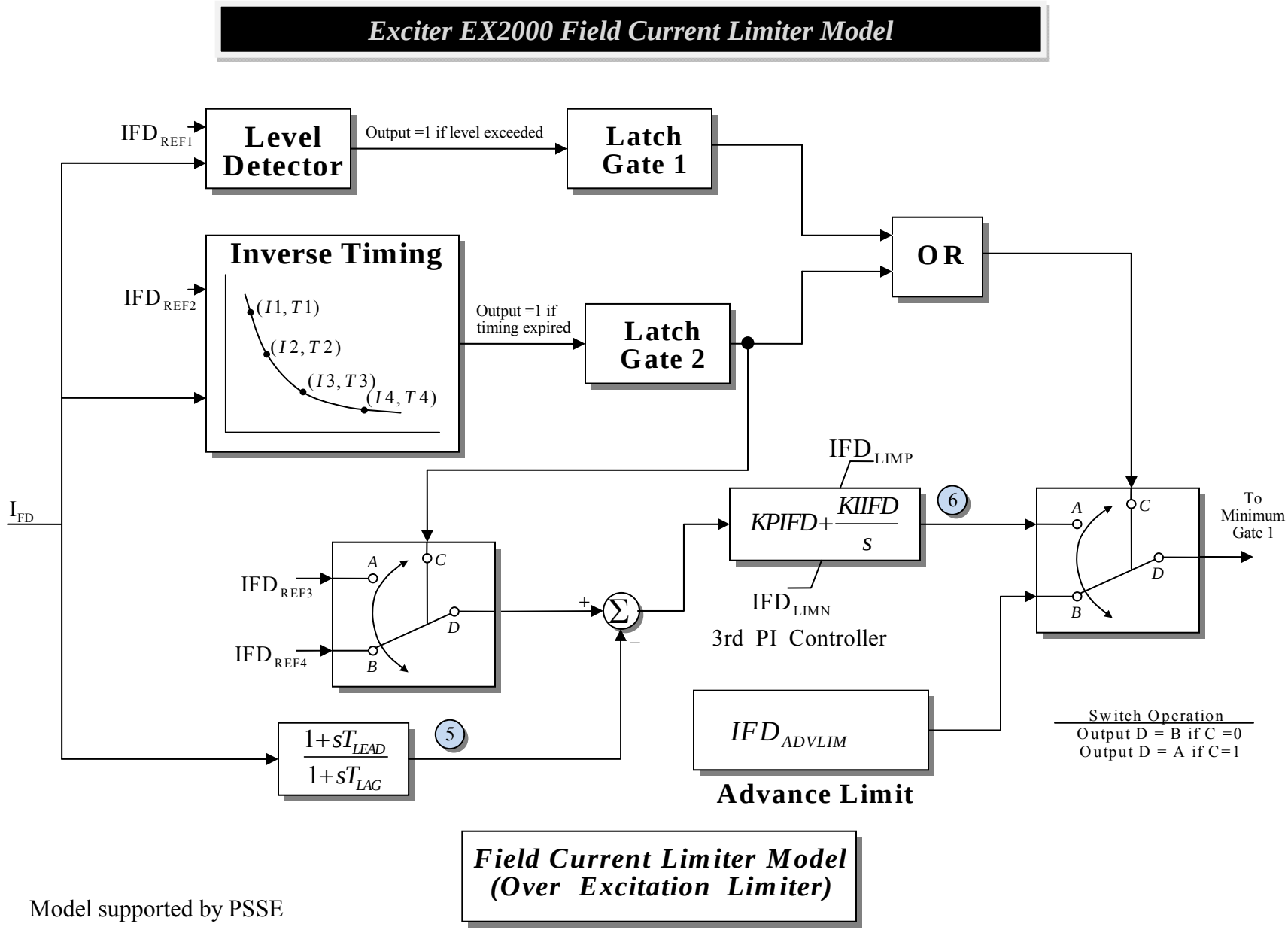

Model supported by PSSE

Exciter EXAC1

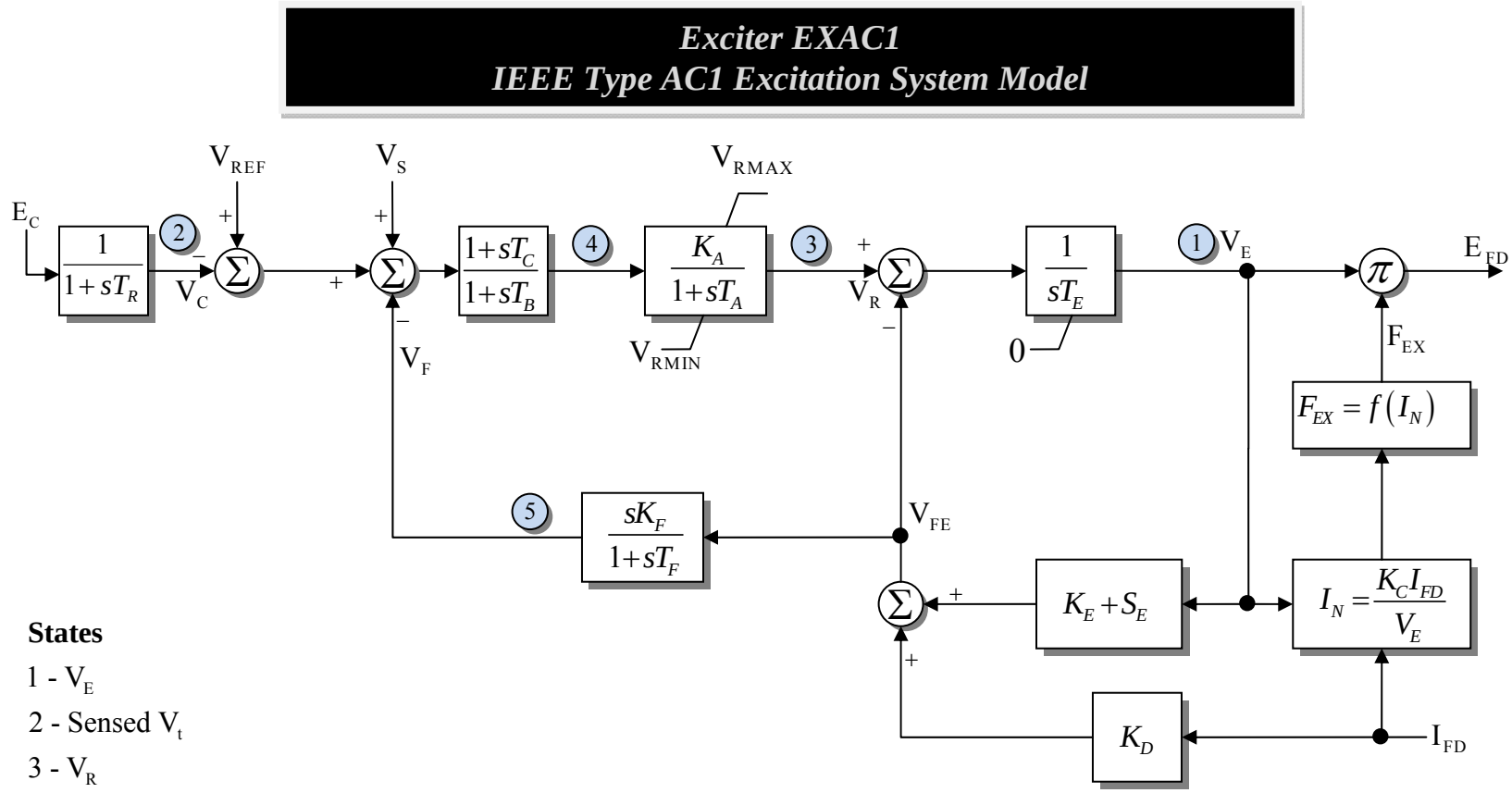

States

1 - V_E

2 - Sensed V_t

3 - V_R

4 - V_{LL}

5 - V_F

Model supported by PSSE

Model supported by PSLF also uses V_{AMIN} and V_{AMAX}

Simulator will narrow the limit range as appropriate when loading the DYD file

If $V_{AMIN} > V_{RMIN}$ then $V_{RMIN} = V_{AMIN}$

If $V_{AMAX} < V_{RMAX}$ then $V_{RMAX} = V_{AMAX}$

Model supported by PSLF includes speed multiplier that is not implemented in Simulator

Exciter EXAC1A

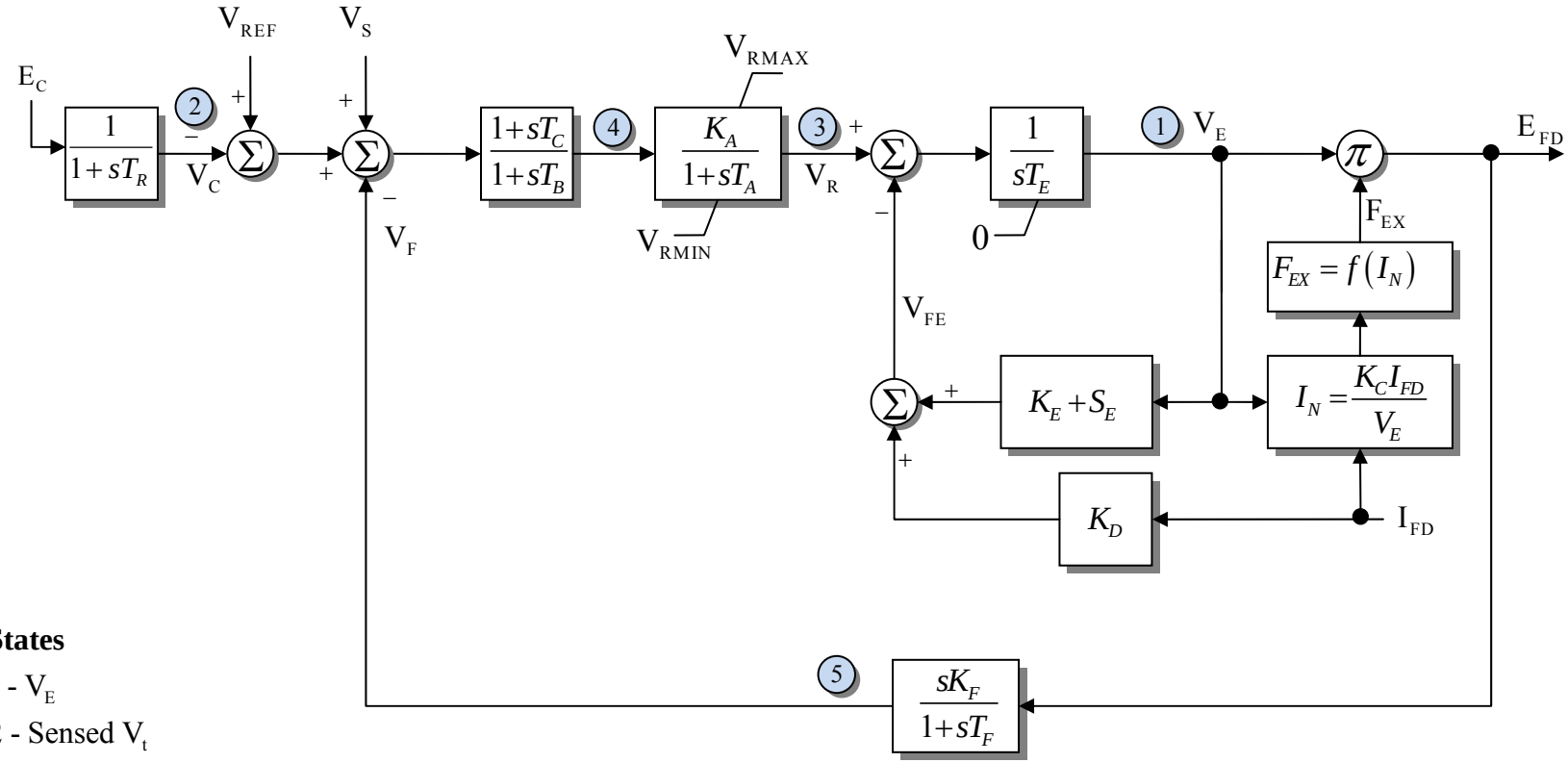

States

1 - V_E

2 - Sensed V_t

3 - V_R

4 - V_{LL}

5 - V_F

Model supported by PSSE

Model supported by PSLF includes speed multiplier that is not implemented in Simulator

Exciter EXAC2

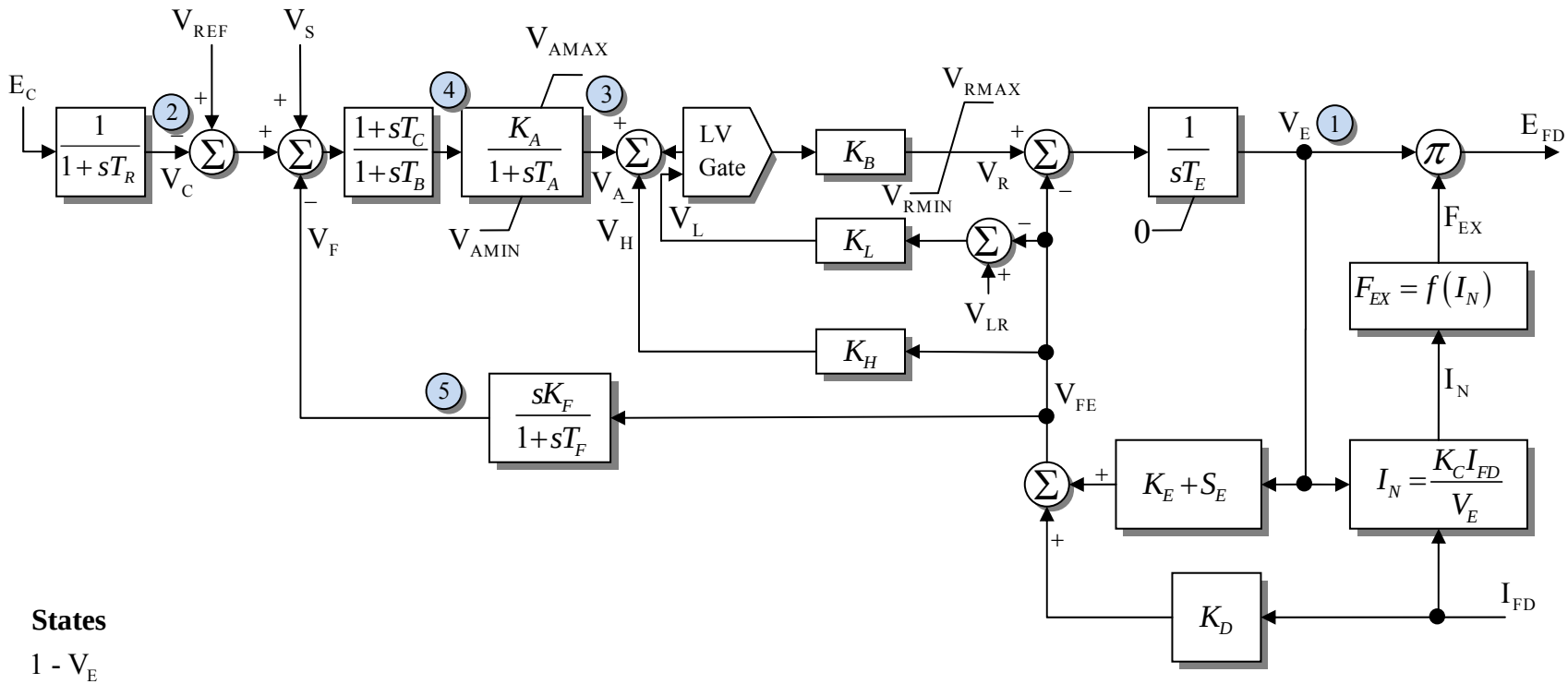

States

1 - V_E

2 - Sensed V_t

3 - V_A

4 - V_{LL}

5 - V_F

Model supported by PSSE

Model supported by PSLF includes speed multiplier that is not implemented in Simulator

Exciter EXAC3

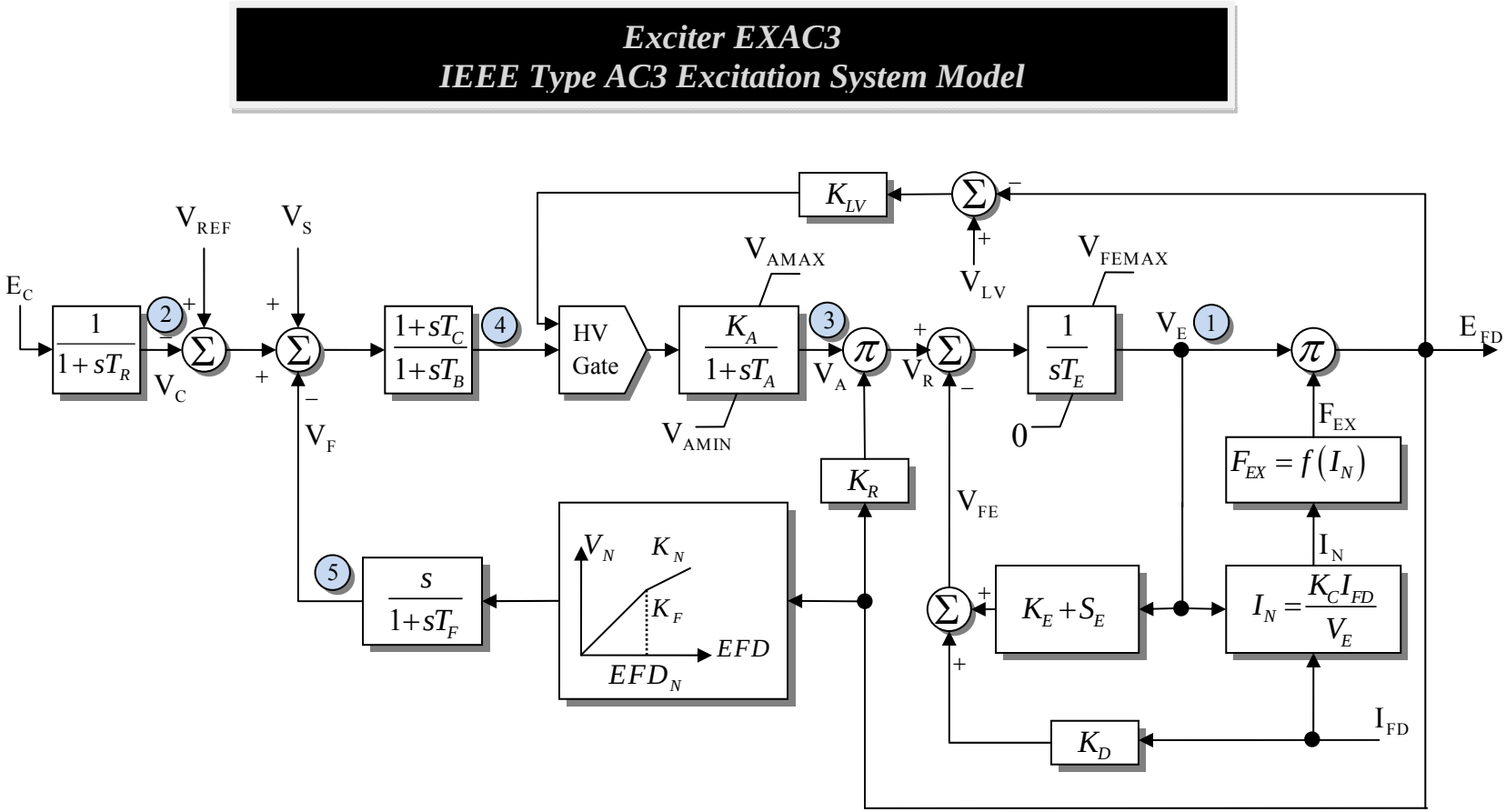

States

1 - V_E

2 - Sensed V_t

3 - V_A

4 - V_{LL}

5 - V_F

Model supported by PSSE

Model supported by PSLF includes speed multiplier that is not implemented in Simulator

Exciter EXAC3A

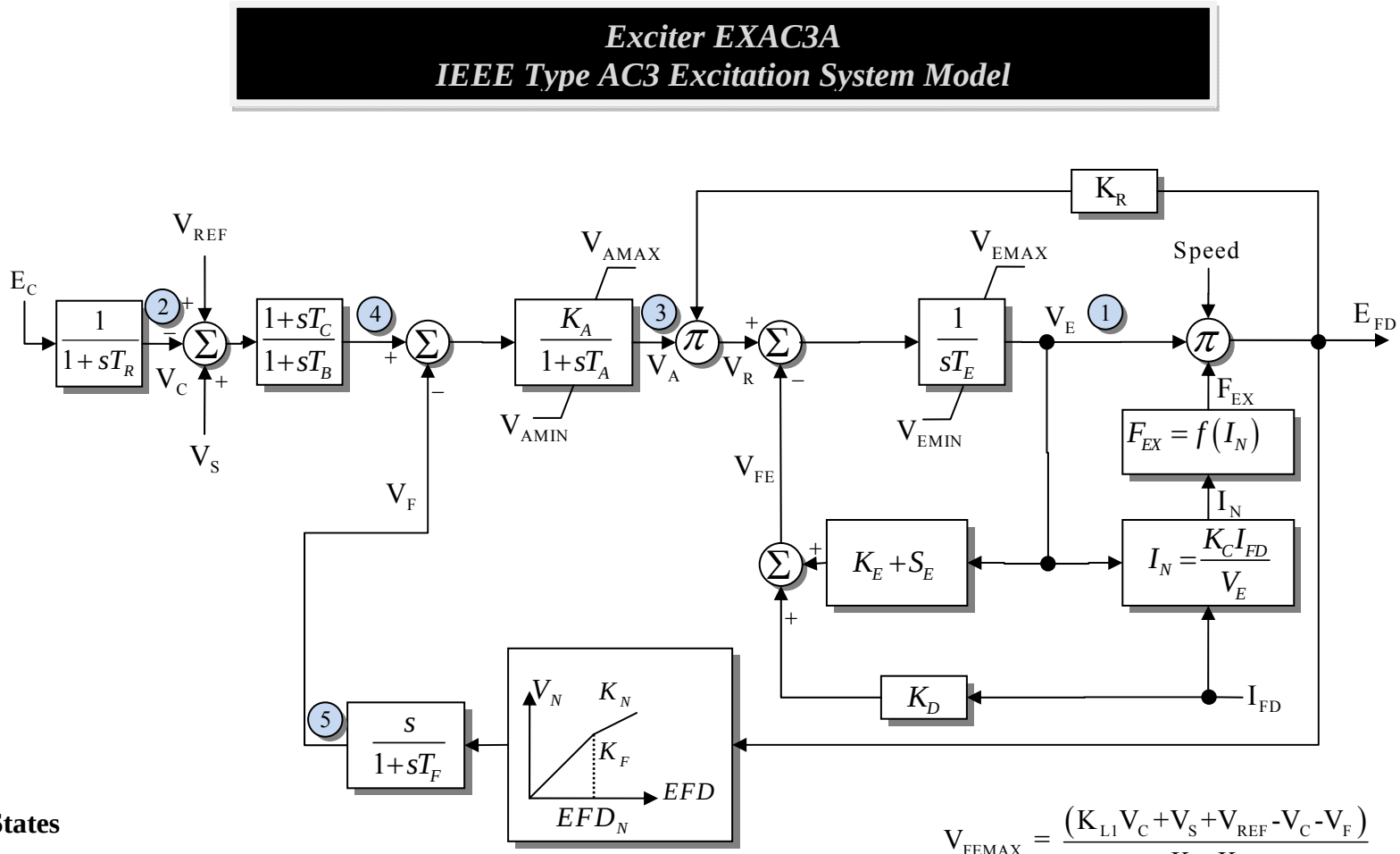

States

1 - V_E

2 - Sensed V_t

3 - V_A

4 - V_{LL}

5 - V_F

Model supported by PSLF

$$V_{FEMAX} = \frac{(K_{L1}V_C + V_S + V_{REF} - V_C - V_F)}{K_{FA}K_{L1}}$$

$$V_{EMAX} = \frac{(V_{FEMAX} - K_D I_{FD})}{S_E + K_E}$$

$$V_{EMIN} = \frac{V_{LV}}{F_{EX}}$$

Exciter EXAC4

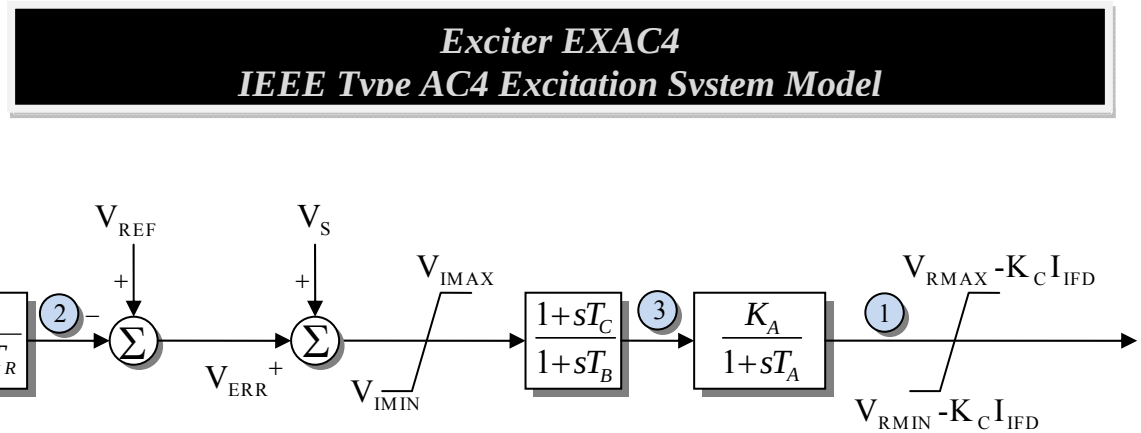

States

1 - EField before limit

2 - Sensed V_t

3 - V_{LL}

Model supported by PSLF and PSSE

Exciter EXAC6A

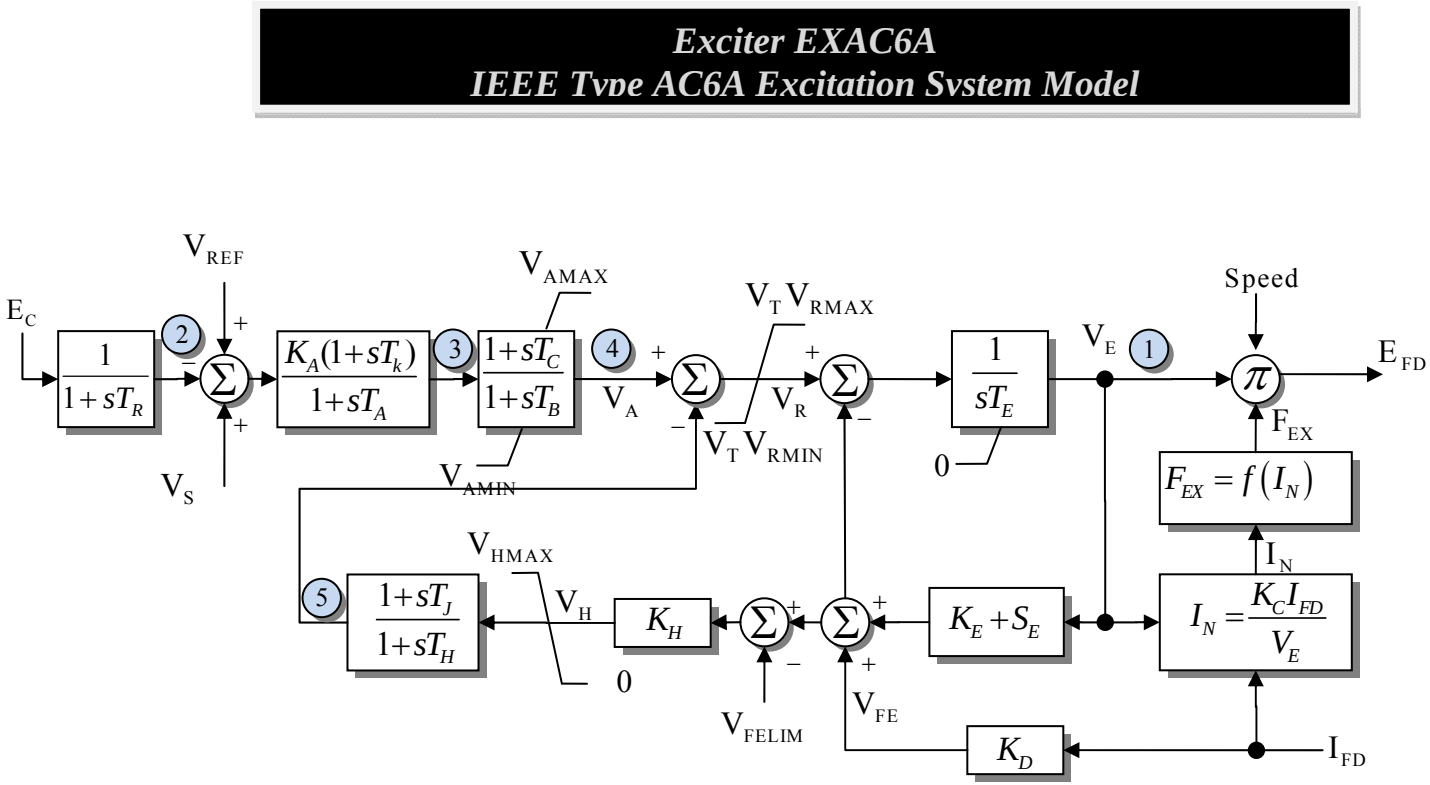

States

1 - V_E

2 - Sensed V_t

3 - T_A Block

4 - V_{LL}

5 - V_F

Model supported by PSLF

Exciter EXAC8B

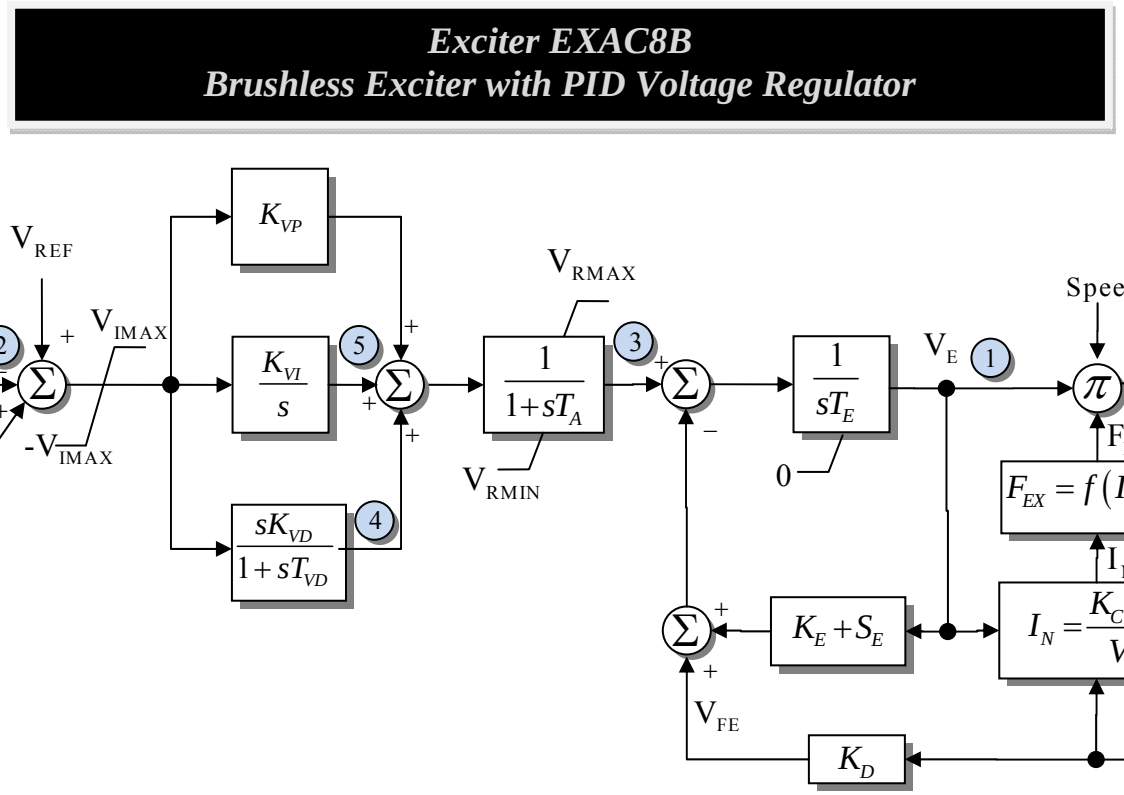

States

1 - V_E

2 - Sensed V_t

3 - V_R

4 - Derivative

5 - Integral

Model supported by PSLF

Exciter EXBAS

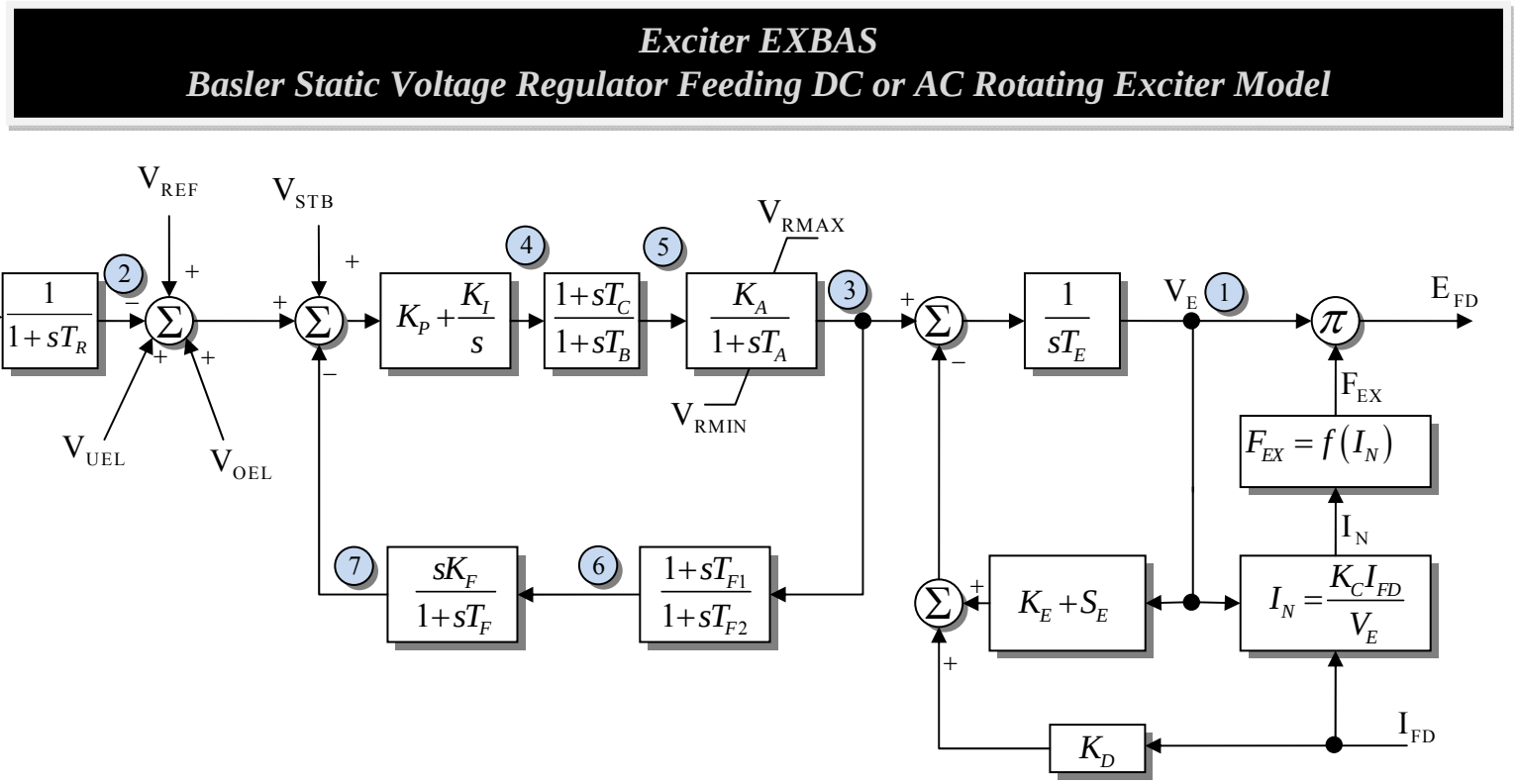

States

1 - V_E

2 - Sensed V_t

3 - V_R

4 - PI

5 - LL

6 - Feedback LL

7 - Feedback

Model supported by PSSE

Exciter EXBBC

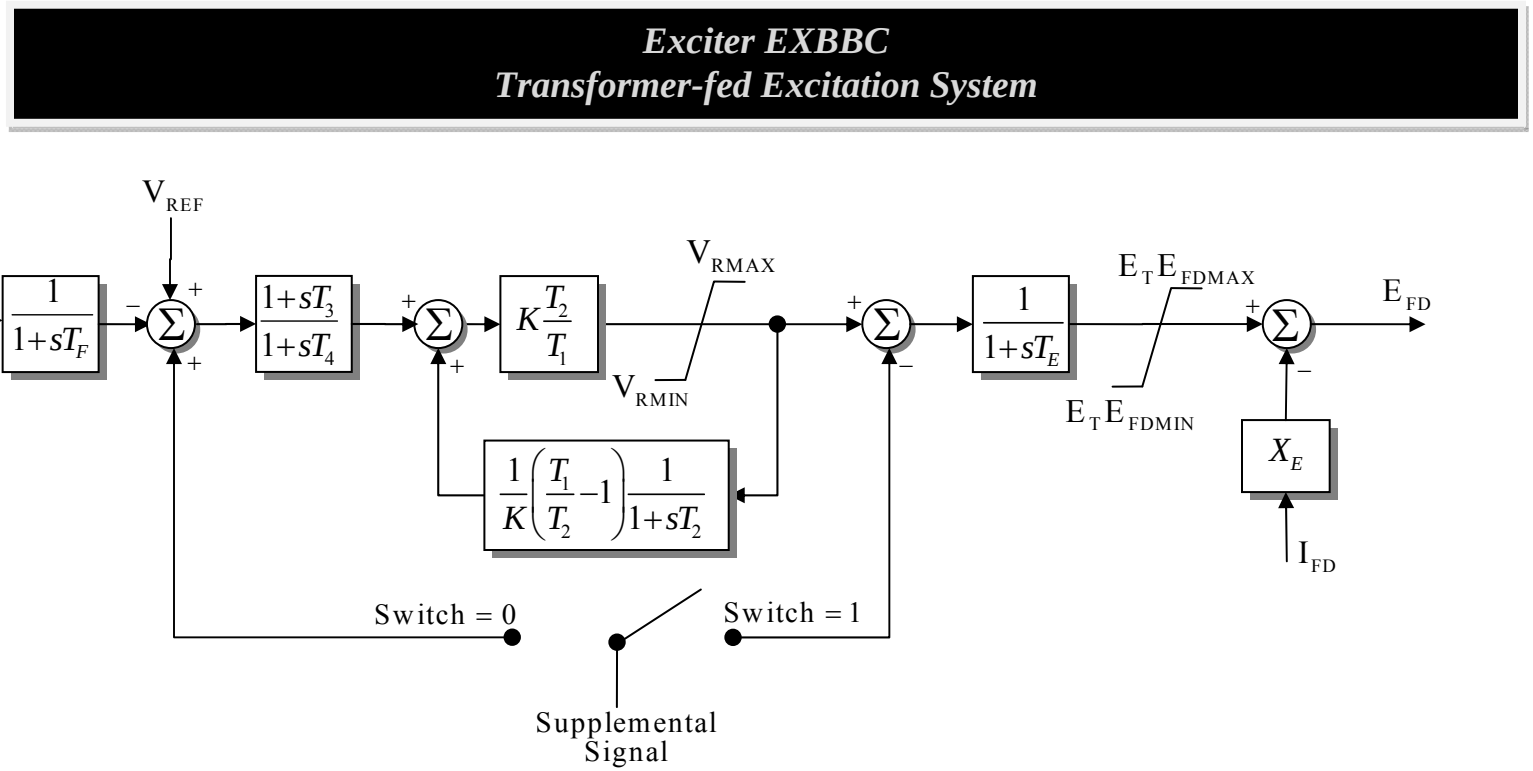

Model supported by PSLF but not yet implemented in Simulator

Exciter EXDC1

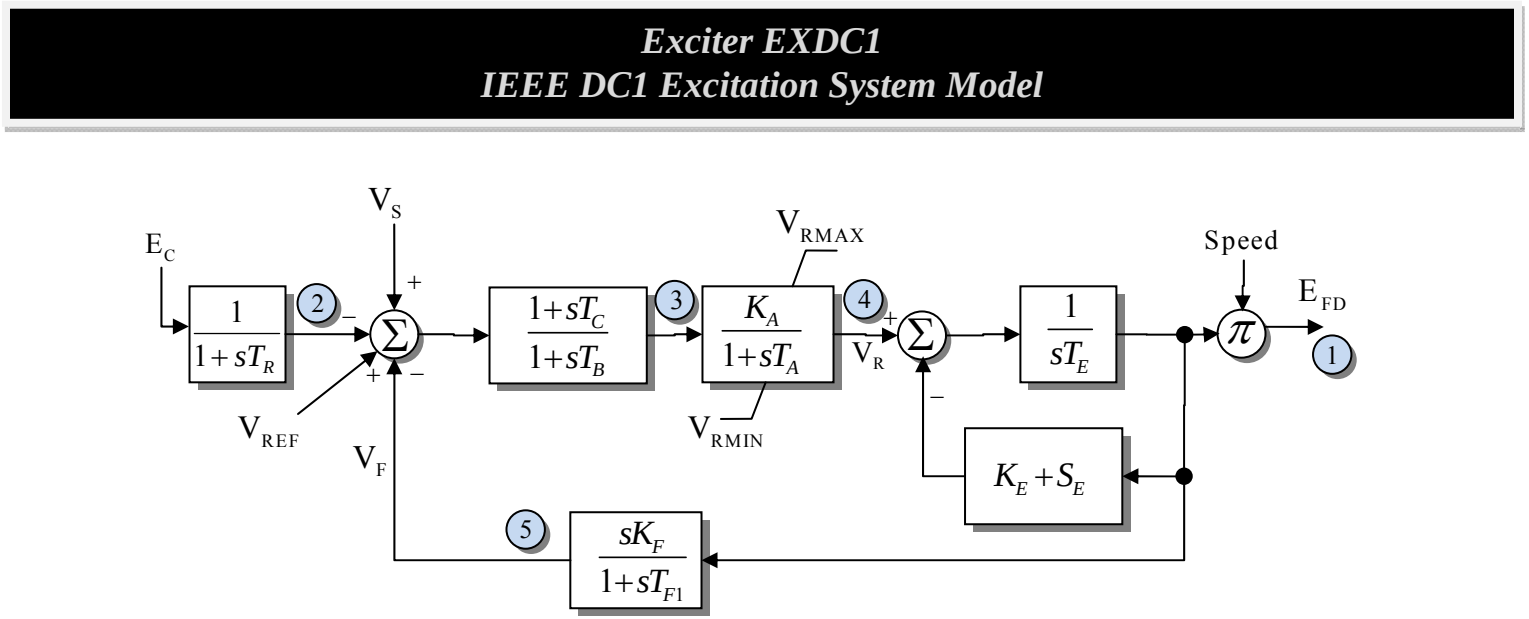

States

1 - E_{FD}

2 - Sensed V_t

3 - V_B

4 - V_R

5 - V_F

Model supported by PSLF

Exciter EXDC2_GE

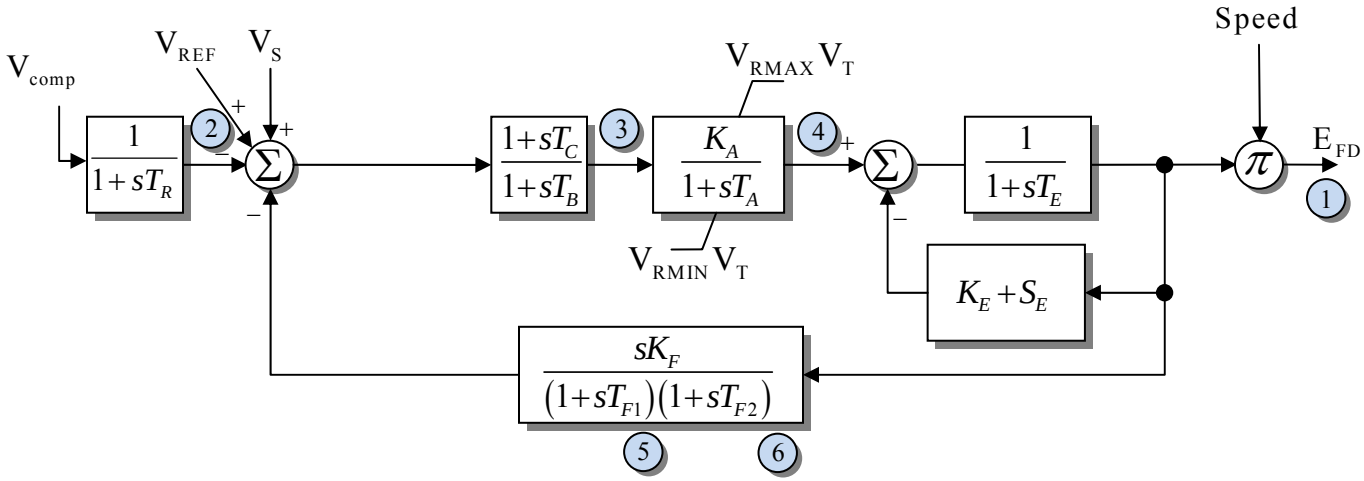

States

1 - E_{FD}

2 - Sensed V_t

3 - V_B

4 - V_R

5 - V_{F1}

6 - V_{F2}

Model supported by PSLF

Exciter EXDC2_PTI

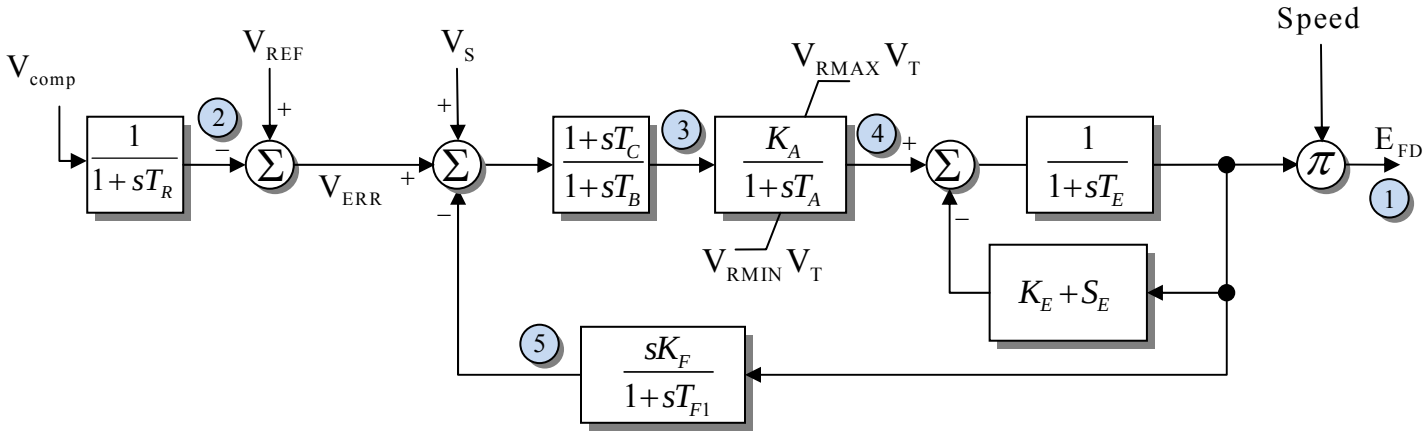

States

1 - E_{FD}

2 - Sensed V_t

3 - V_B

4 - V_R

5 - V_F

Model supported by PSEE

Exciter EXDC2A

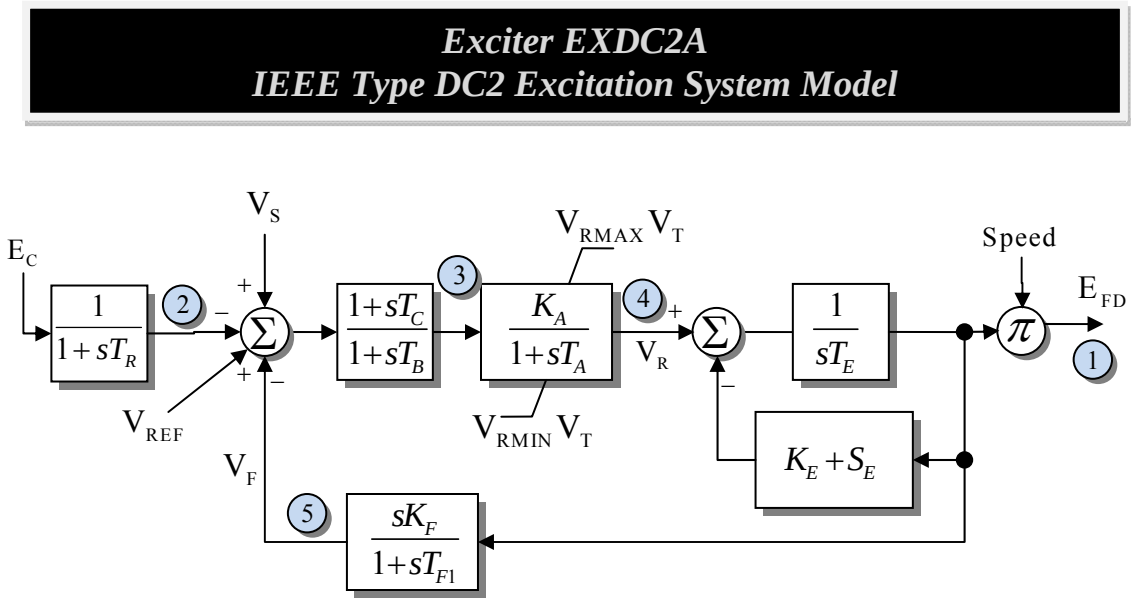

States

1 - E_{FD}

2 - Sensed V_t

3 - V_B

4 - V_R

5 - V_F

Model supported by PSLF

Exciter EXDC4

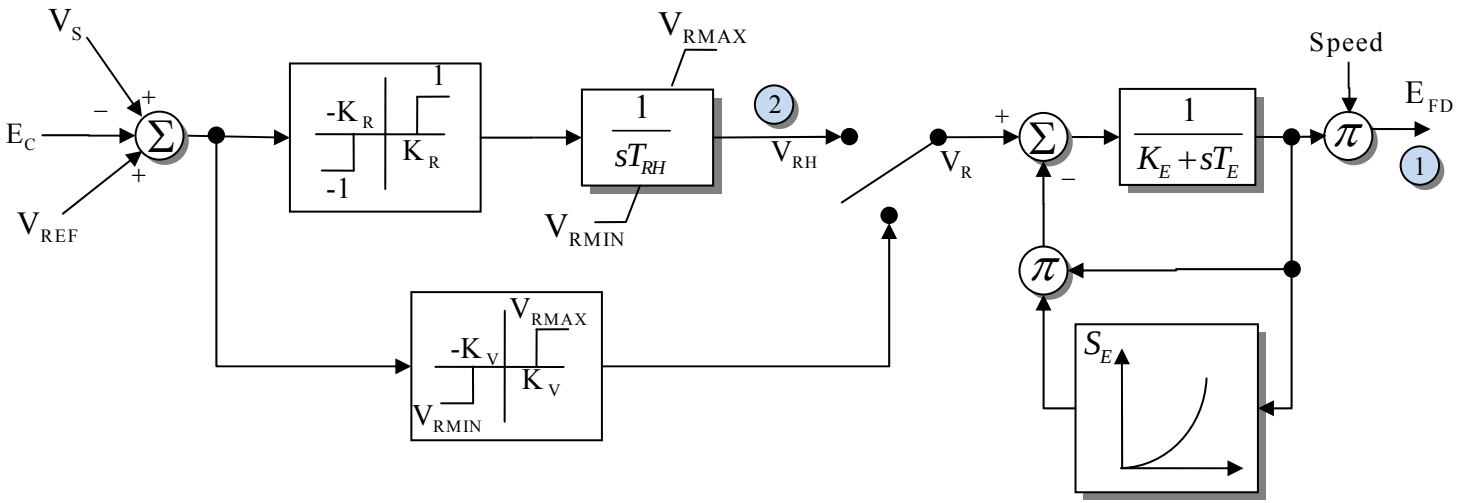

States

1 - E_{FD}

2 - V_{RH}

Model supported by PSLF

Exciter EXELI

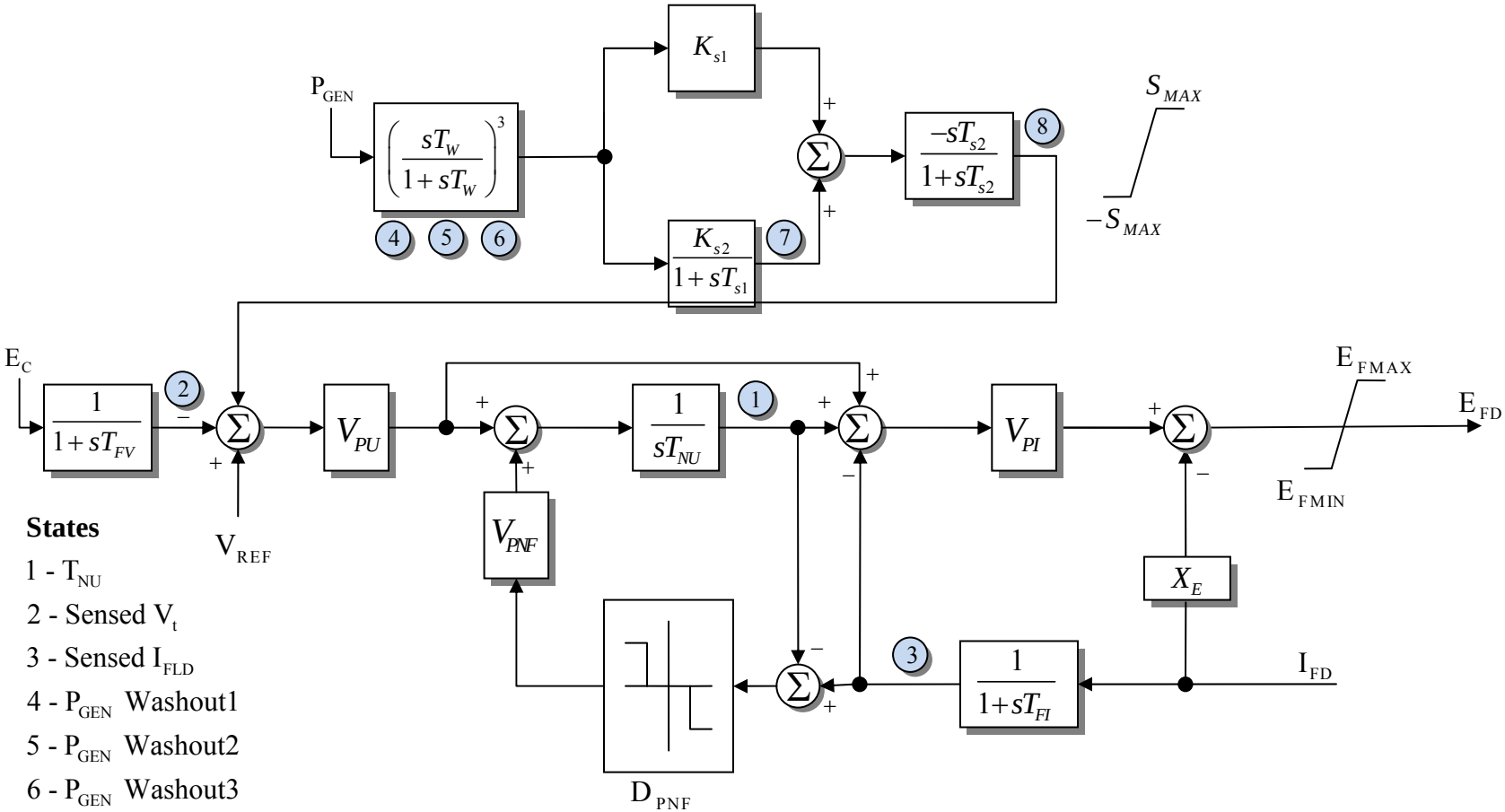

Exciter EXPIC1

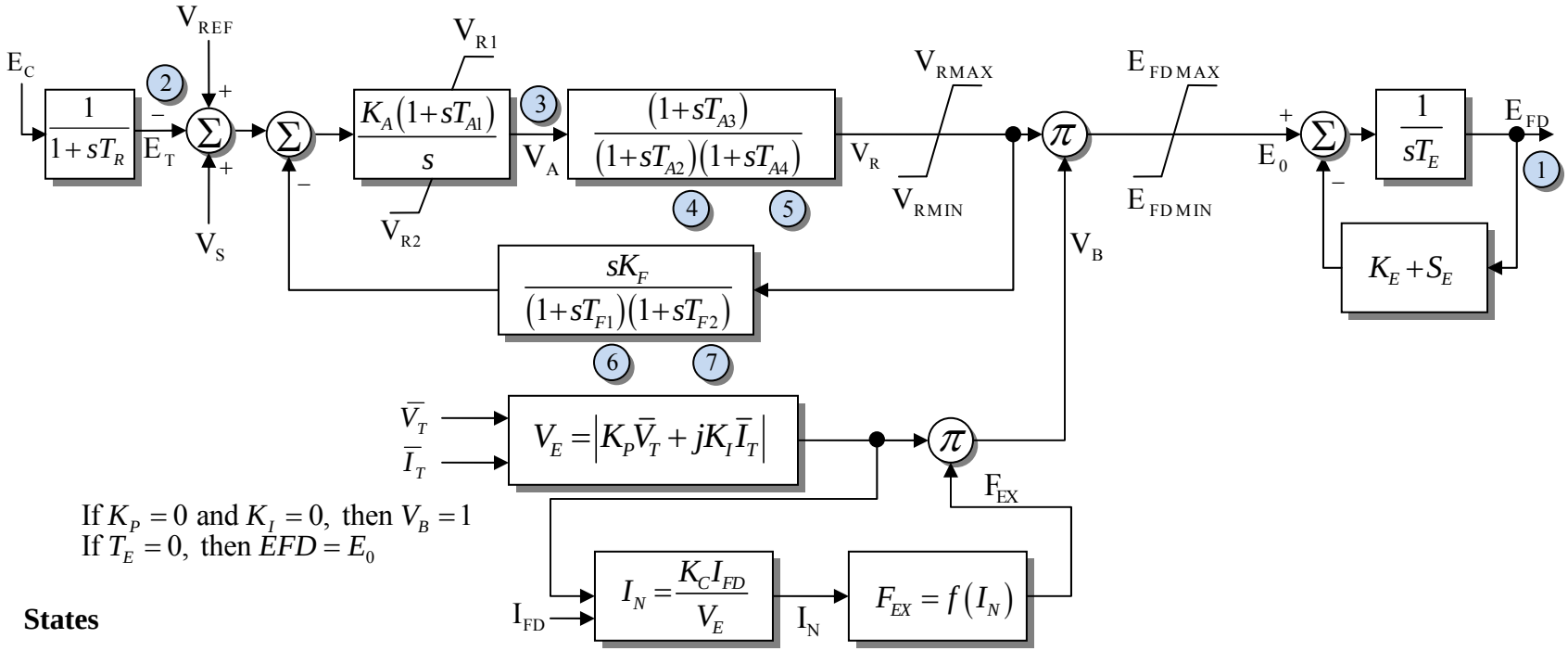

If $K_P = 0$ and $K_I = 0$, then $V_B = 1$
If $T_E = 0$, then $EFD = E_0$

States

1 - E_{FD}

2 - Sensed V_t

3 - V_A

4 - V_{R1}

5 - V_R

6 - V_{F1}

7 - V_F

Model supported by PSLF and PSSE

Exciter EXST1_GE

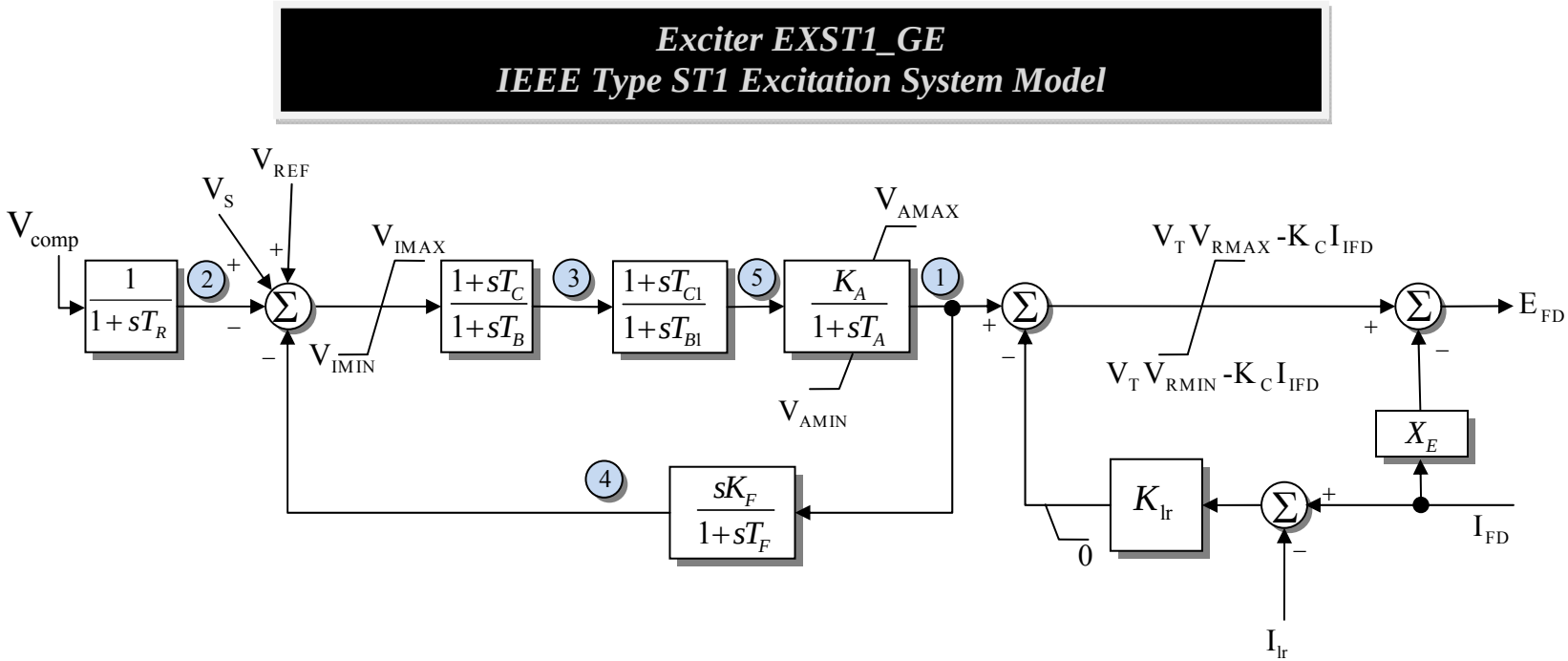

States

1 - V_A

2 - Sensed V_t

3 - V_{LL}

4 - V_F

5 - V_{LL1}

Model supported by PSLF

Exciter EXST1_PTI

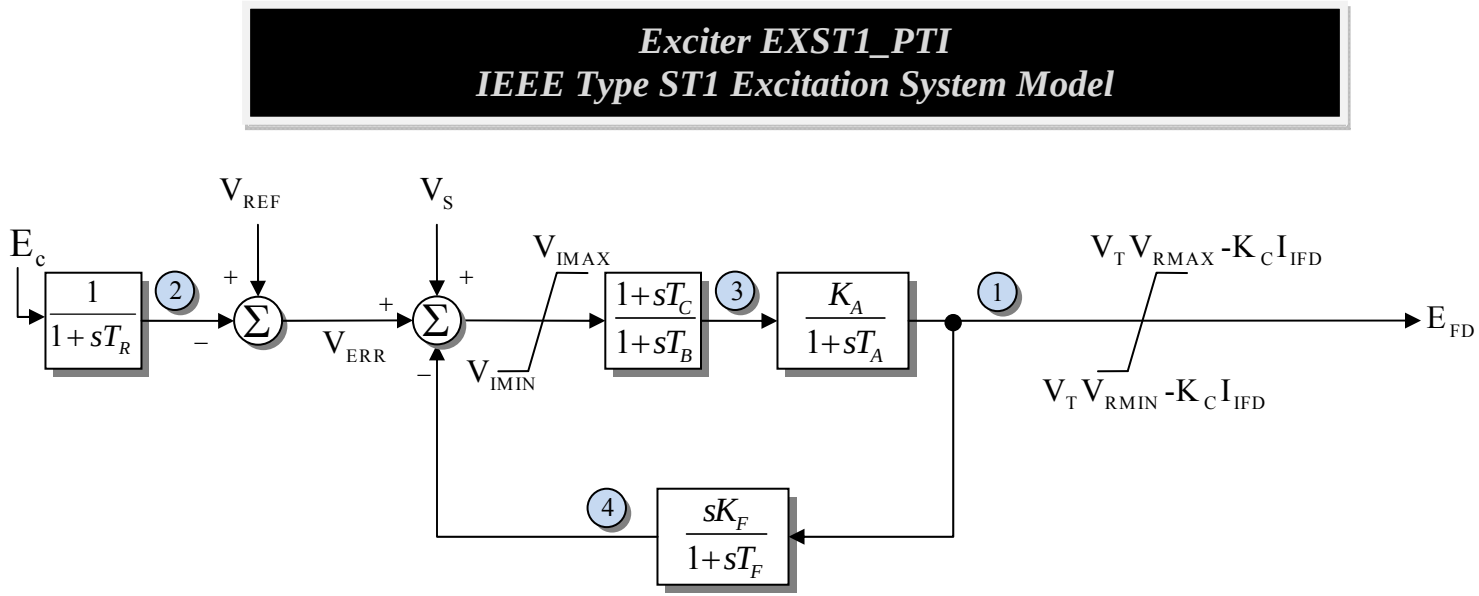

States

1 - E_{FD} before limit

2 - Sensed V_t

3 - V_{LL}

4 - V_F

Model supported by PSSE

Exciter EXST2

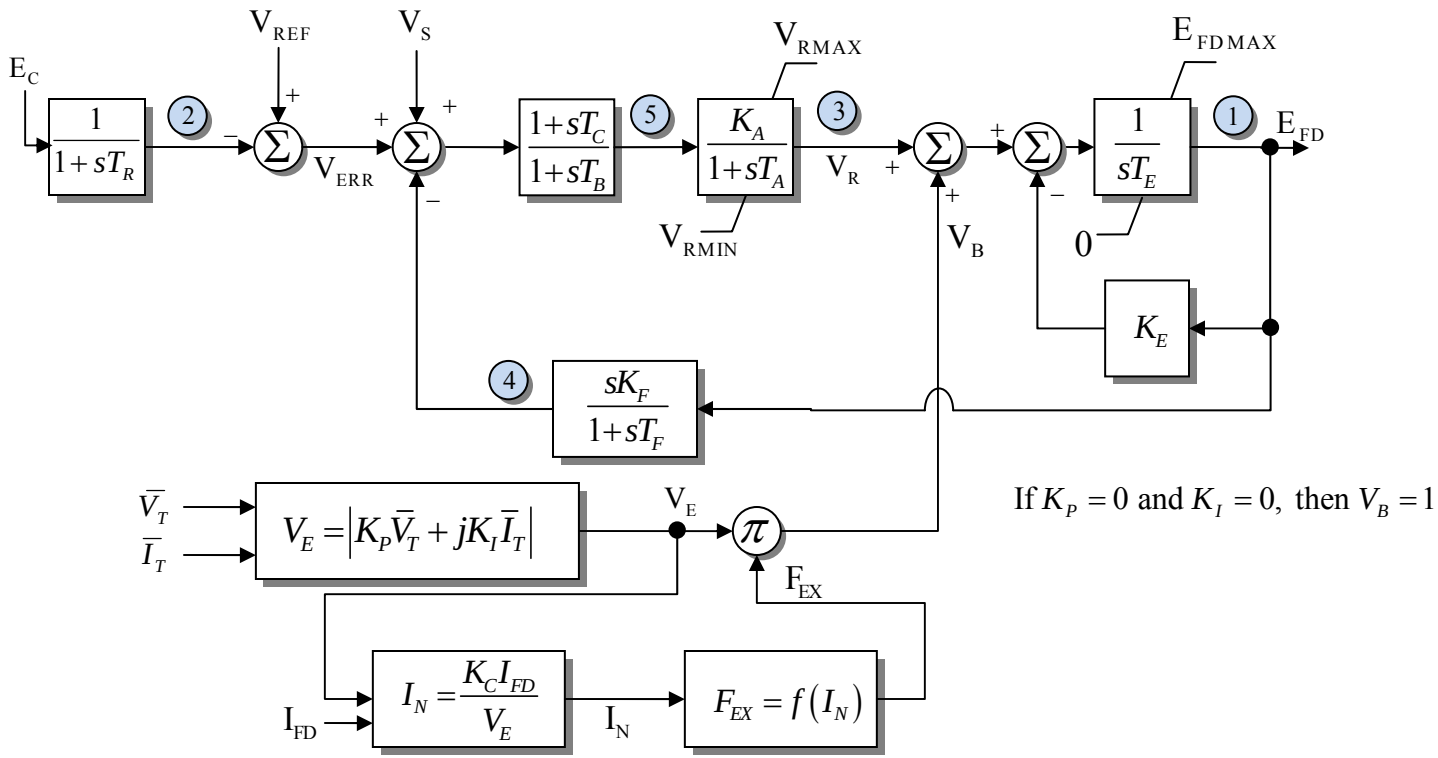

States

1 - E_{FD}

2 - Sensed V_t

3 - V_R

4 - V_F

5 - V_{LL}

Model supported by PSLF

Model supported by PSSE does not include T_B and T_C inputs

Exciter EXST2A

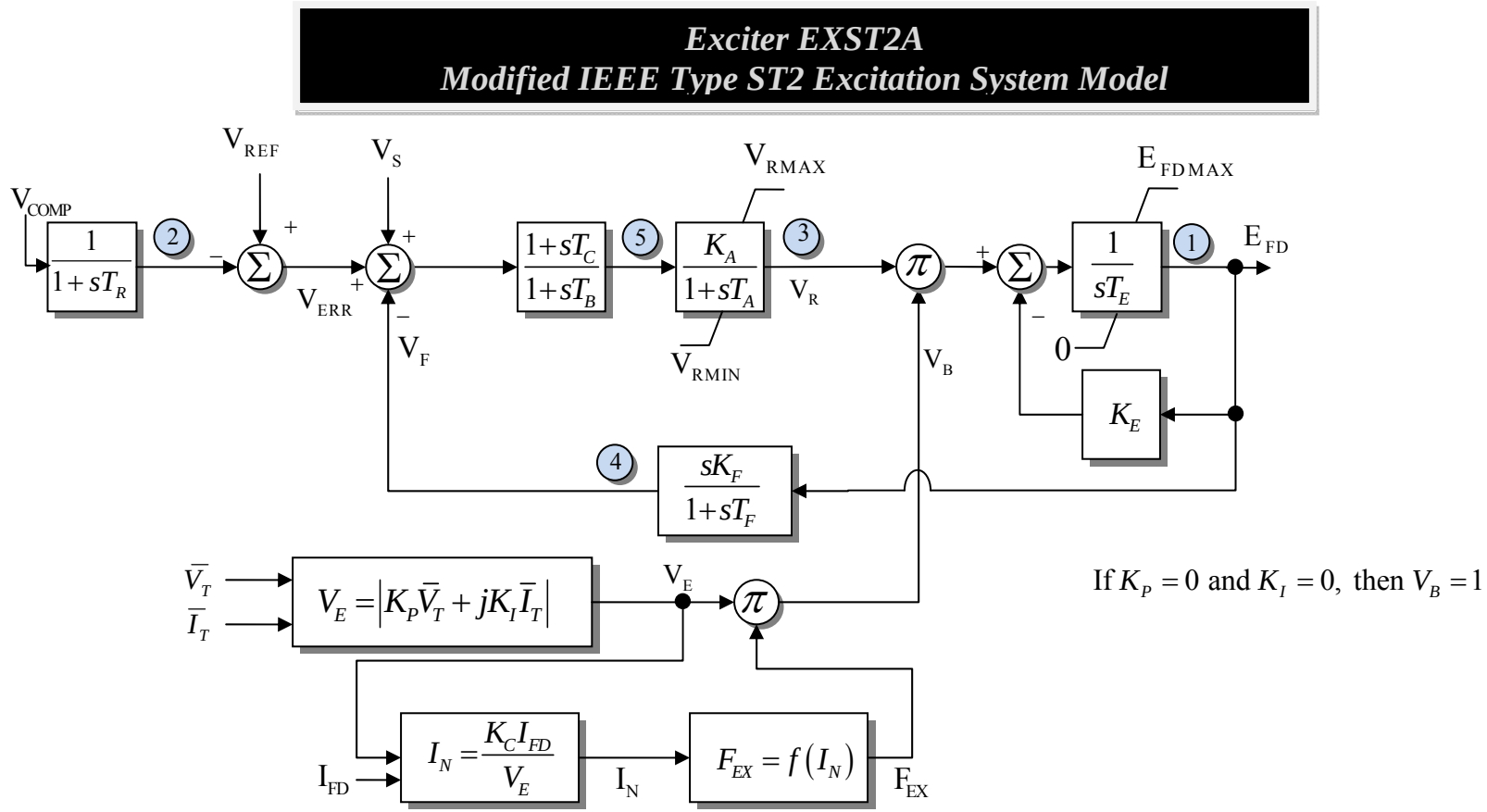

States

1 - E_{FD}

2 - Sensed V_t

3 - V_R

4 - V_F

5 - V_{LL}

Model supported by PSLF

Model supported by PSSE does not include T_B and T_C inputs

Exciter EXST3

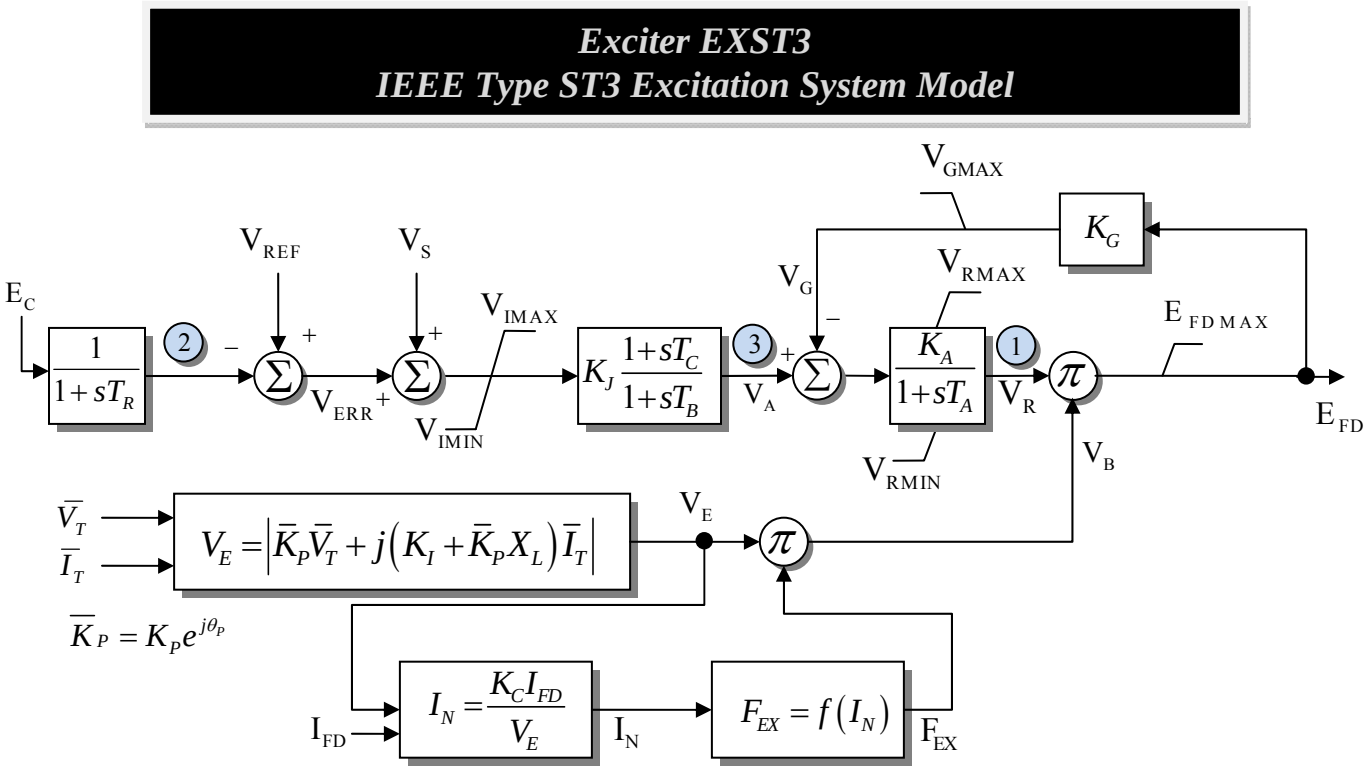

States

1 - V_R

2 - Sensed V_t

3 - LL

Model supported by PSSE

Model supported by PSLF includes speed multiplier that is not implemented in Simulator

Exciter EXST3A

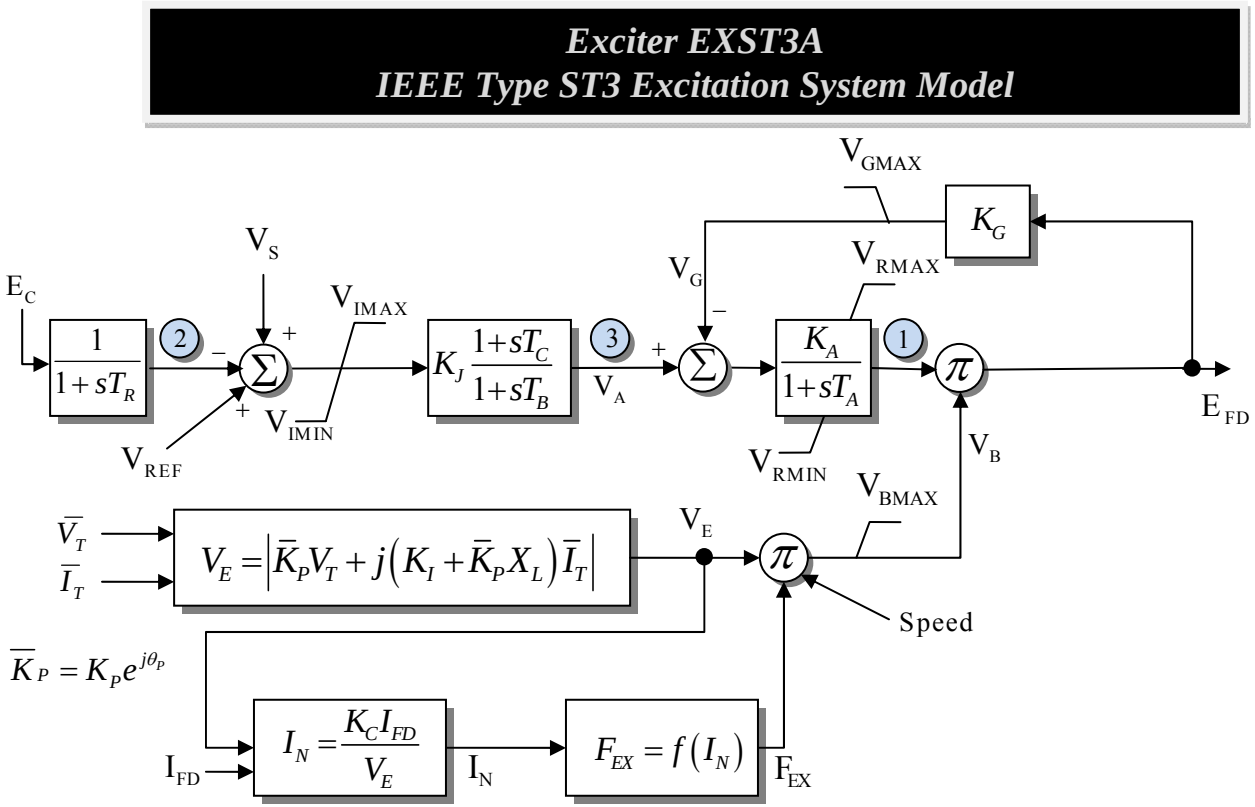

States

1 - V_R

2 - Sensed V_t

3 - LL

Model supported by PSLF

Exciter EXST4B

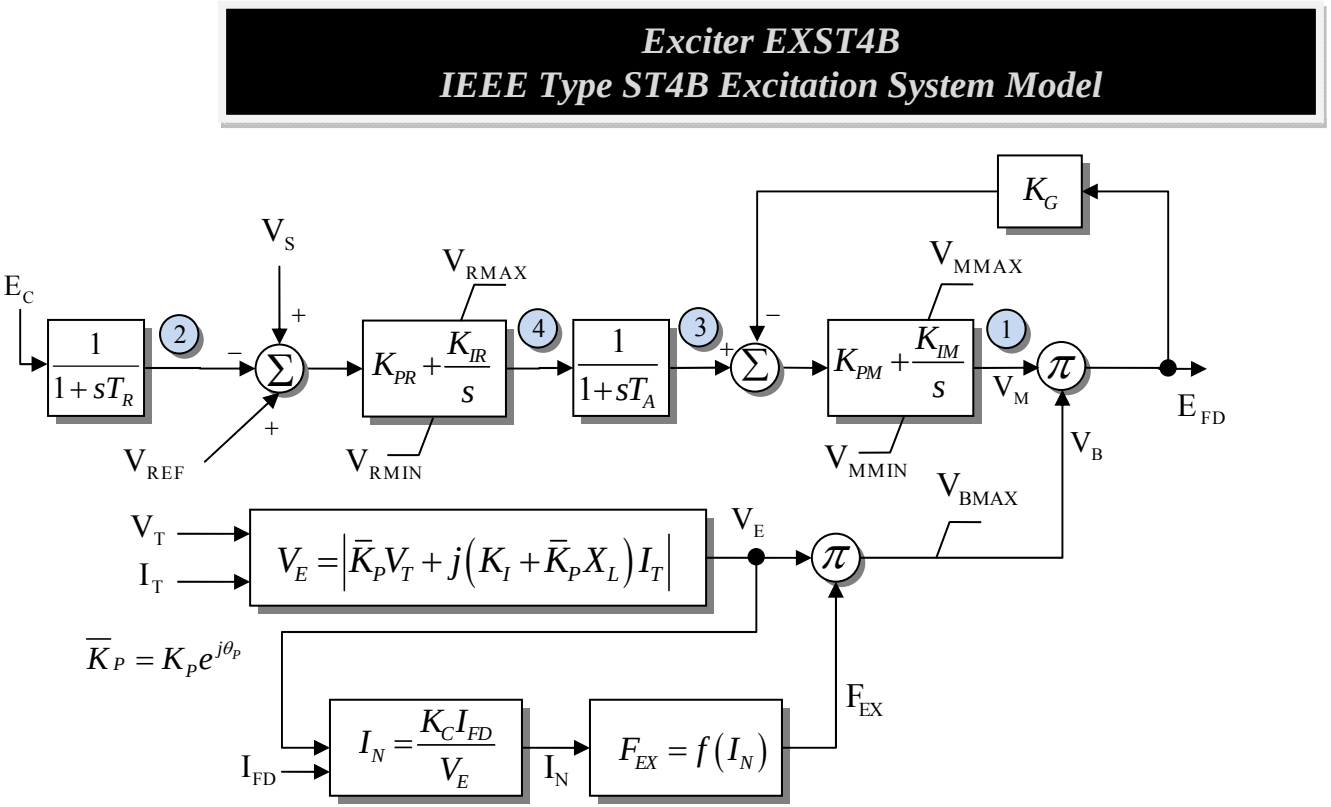

States

1 - V_{MInt}

2 - Sensed V_t

3 - V_A

4 - V_R

Model supported by PSLF

Exciter EXWTG1

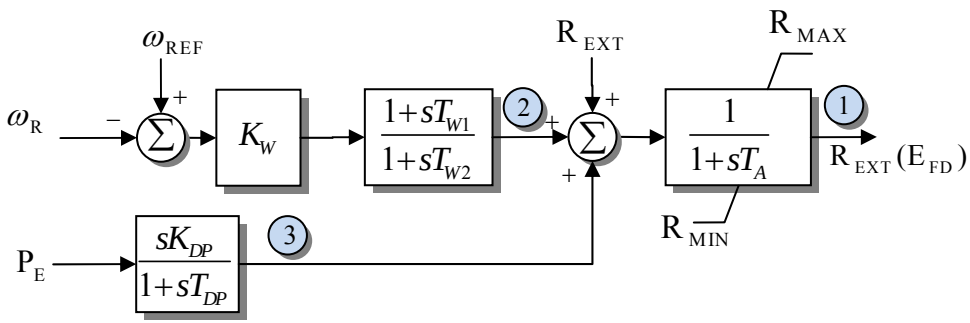

States

1 - $R_{external}$

2 - SpeedReg

3 - Washout

Model supported by PSLF

Exciter EXWTGE

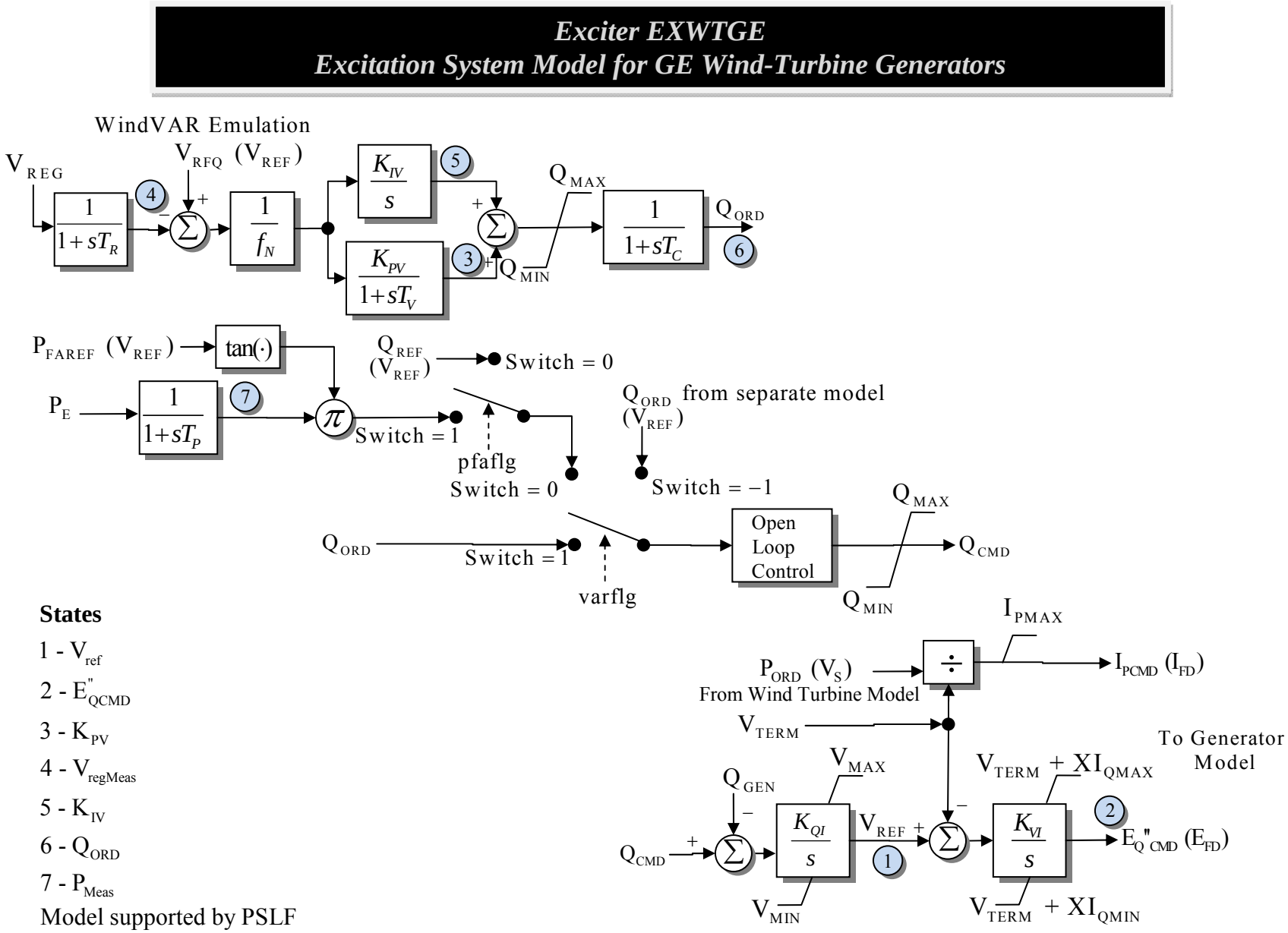

States

1 - V_{ref}

2 - E''_{QCMD}

3 - K_{PV}

4 - $V_{regMeas}$

5 - K_{IV}

6 - Q_{ORD}

7 - P_{Meas}

Model supported by PSLF

Exciter IEEET1

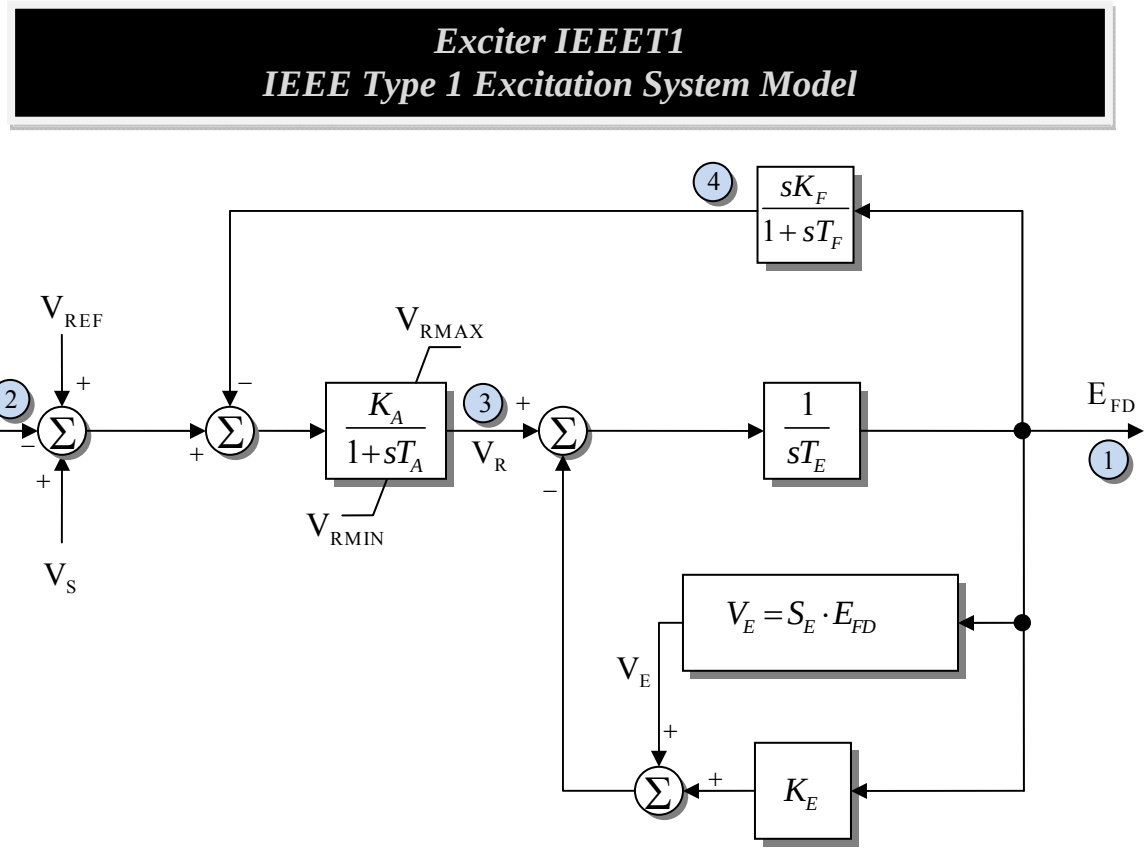

States

1 - EField

2 - Sensed V_t

3 - V_R

4 - V_F

Model supported by PSSE

Model supported by PSLF includes speed multiplier that is not implemented in Simulator

Exciter IEEET2

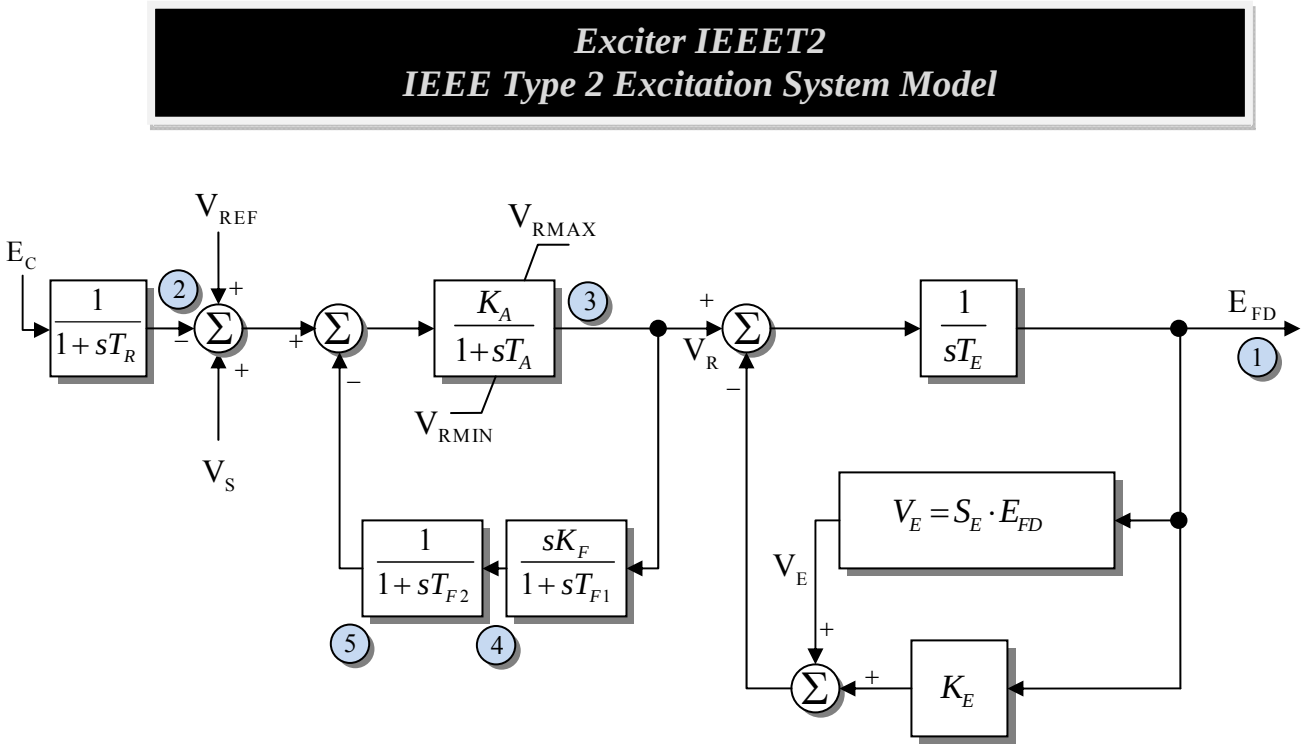

States

1 - EField

2 - Sensed V_t

3 - V_R

4 - V_{F1}

5 - V_{F2}

Model supported by PSSE

Exciter IEEET3

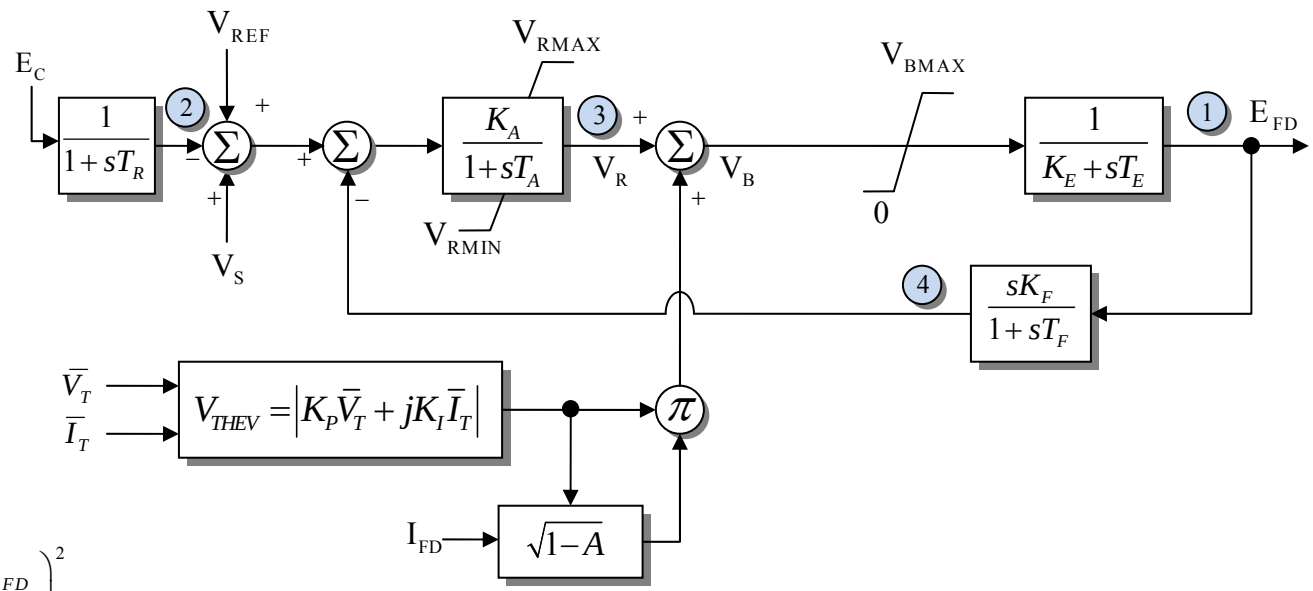

$$A = \left(\frac{0.78 \cdot I_{FD}}{V_{THEV}} \right)^2$$

If $A > 1$, $V_B = 0$

States

1 - EField

2 - Sensed V_t

3 - V_R

4 - V_F

Model supported by PSSE

Exciter IEEET4

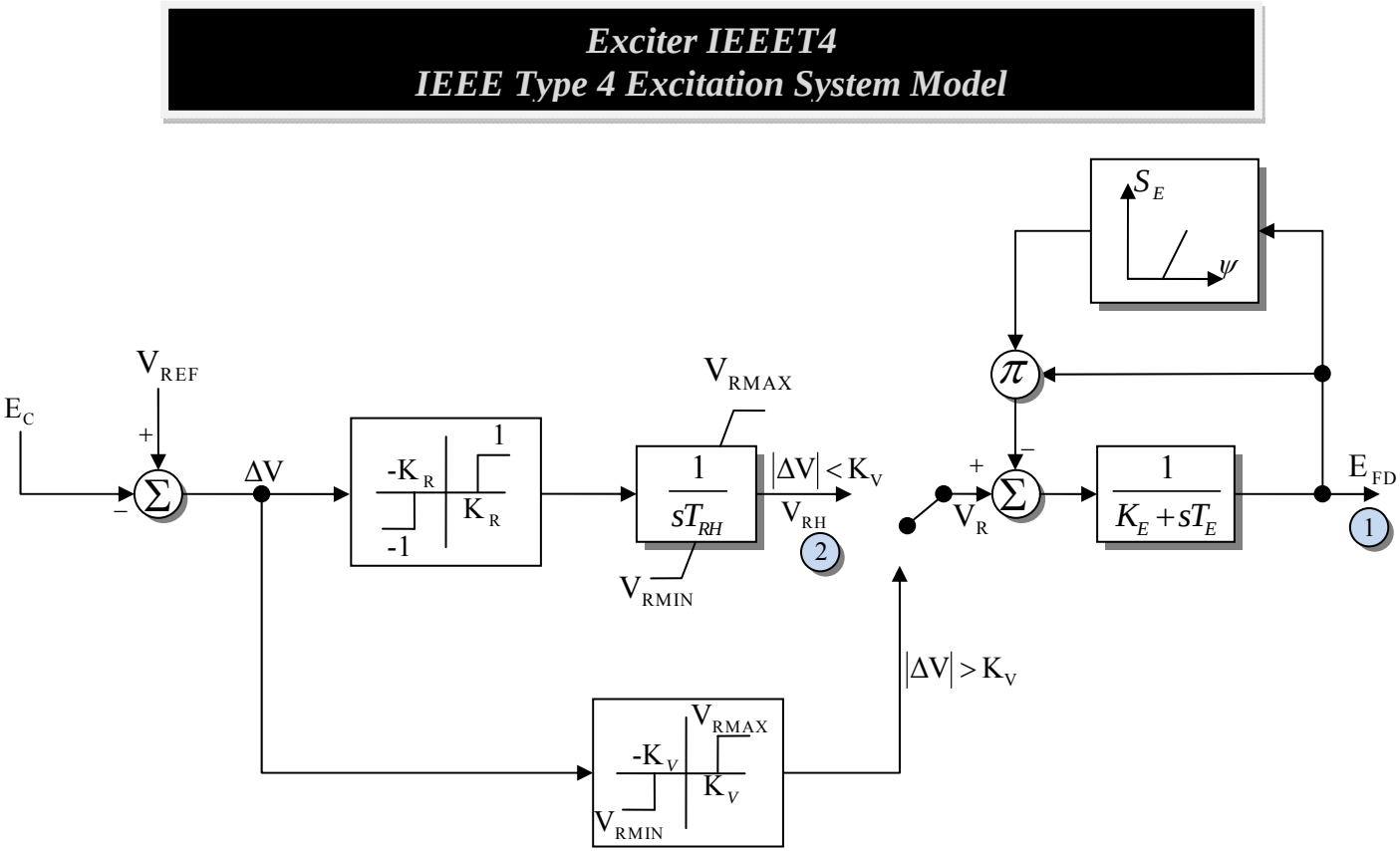

States

1 - EField

2 - V_{RH}

Model supported by PSSE

Exciter IEEET5

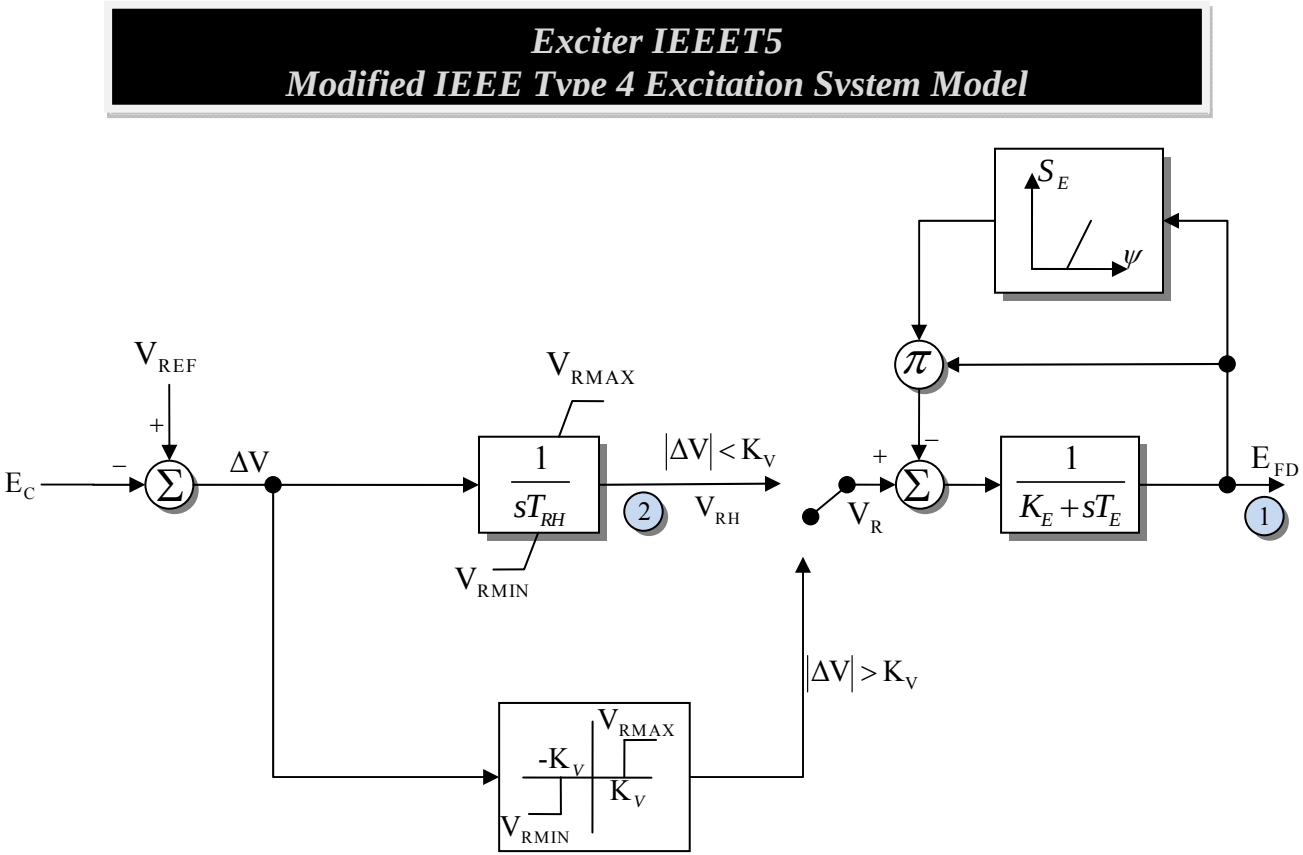

States

1 - EField

2 - V_{RH}

Model supported by PSSE

Exciter IEEEX1

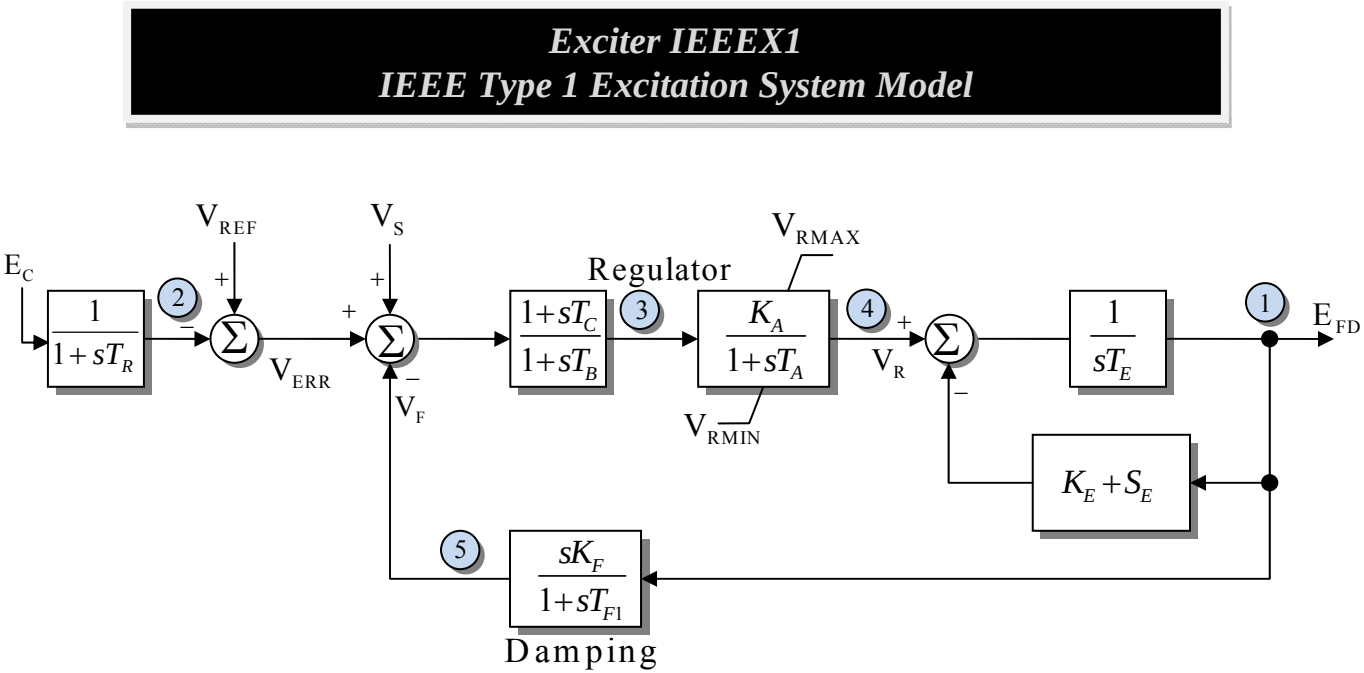

States

1 - EField

2 - Sensed V_t

3 - V_B

4 - V_R

5 - V_F

Model supported by PSSE

Exciter IEEEX2

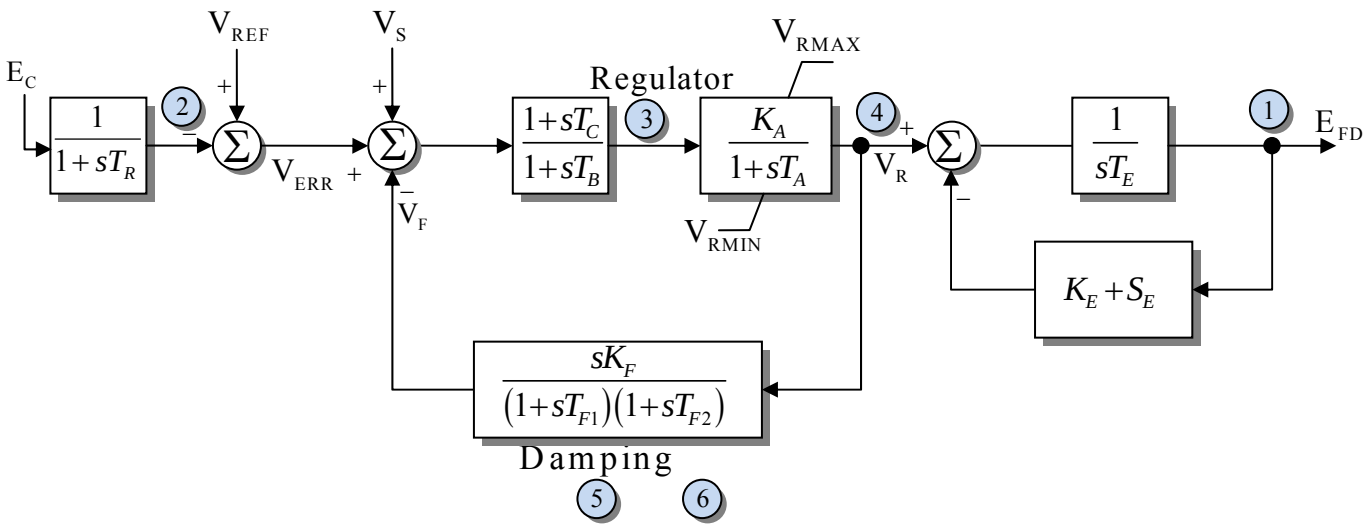

States

1 - EField

2 - Sensed V_t

3 - LL

4 - V_R

5 - V_{F1}

6 - V_{F2}

Model supported by PSSE

Exciter IEEEX3

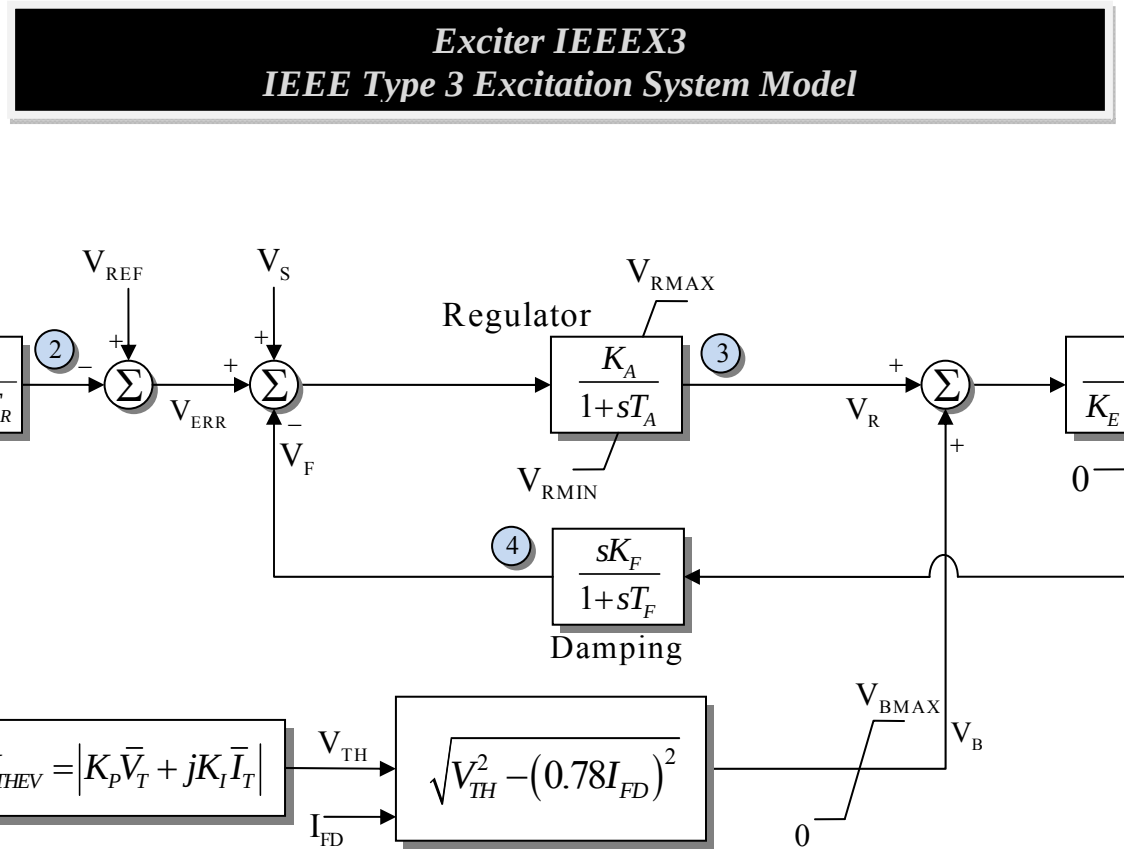

States

1 - EField

2 - Sensed V_t

3 - V_R

4 - V_F

Model supported by PSSE

Exciter IEEEX4

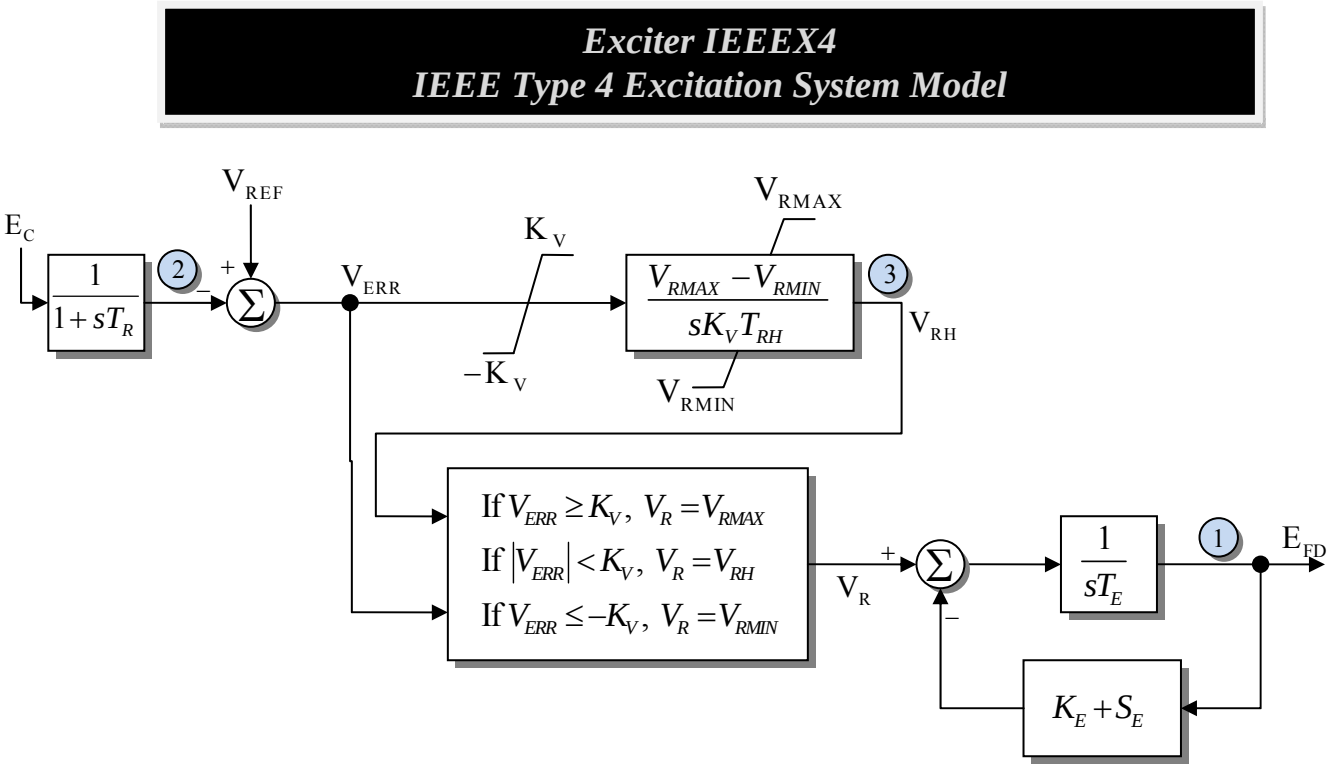

States

1 - EField

2 - Sensed V_t

3 - V_{RH}

Model supported by PSSE

Exciter IEET1A

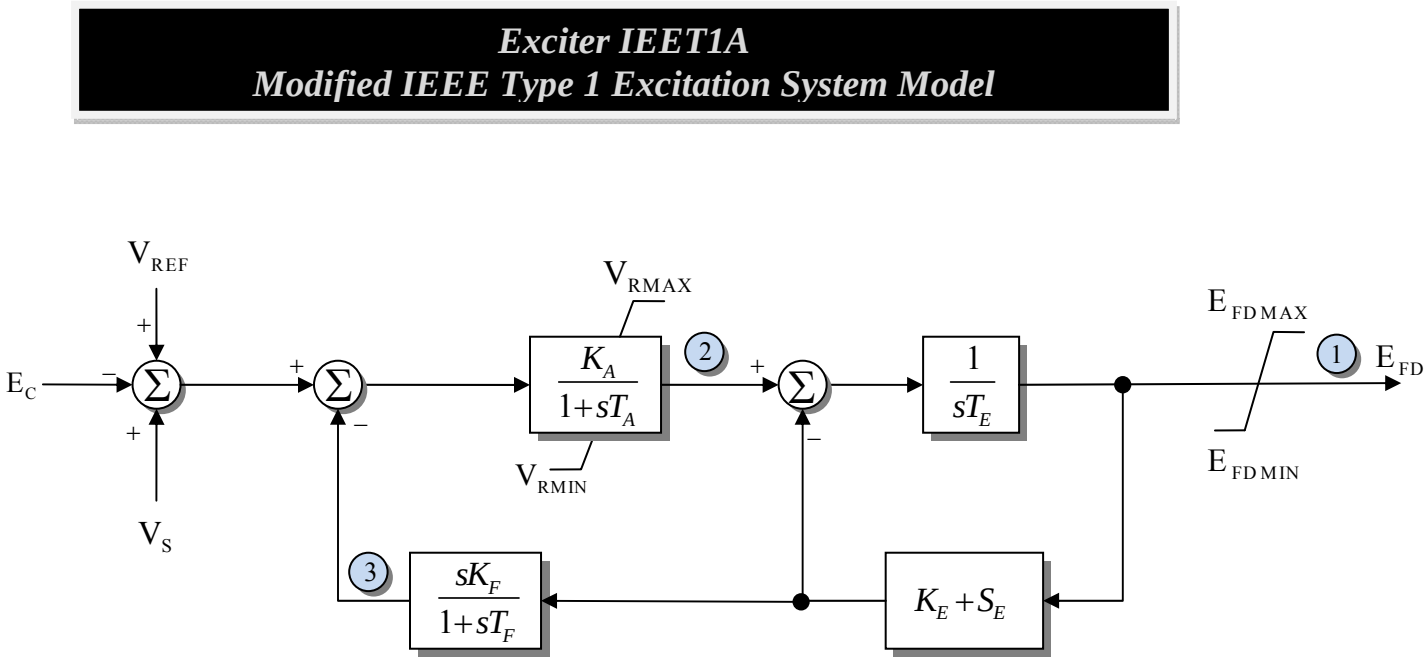

States

1 - EField

2 - V_R

3 - V_F

Model supported by PSSE

Exciter IEET1B

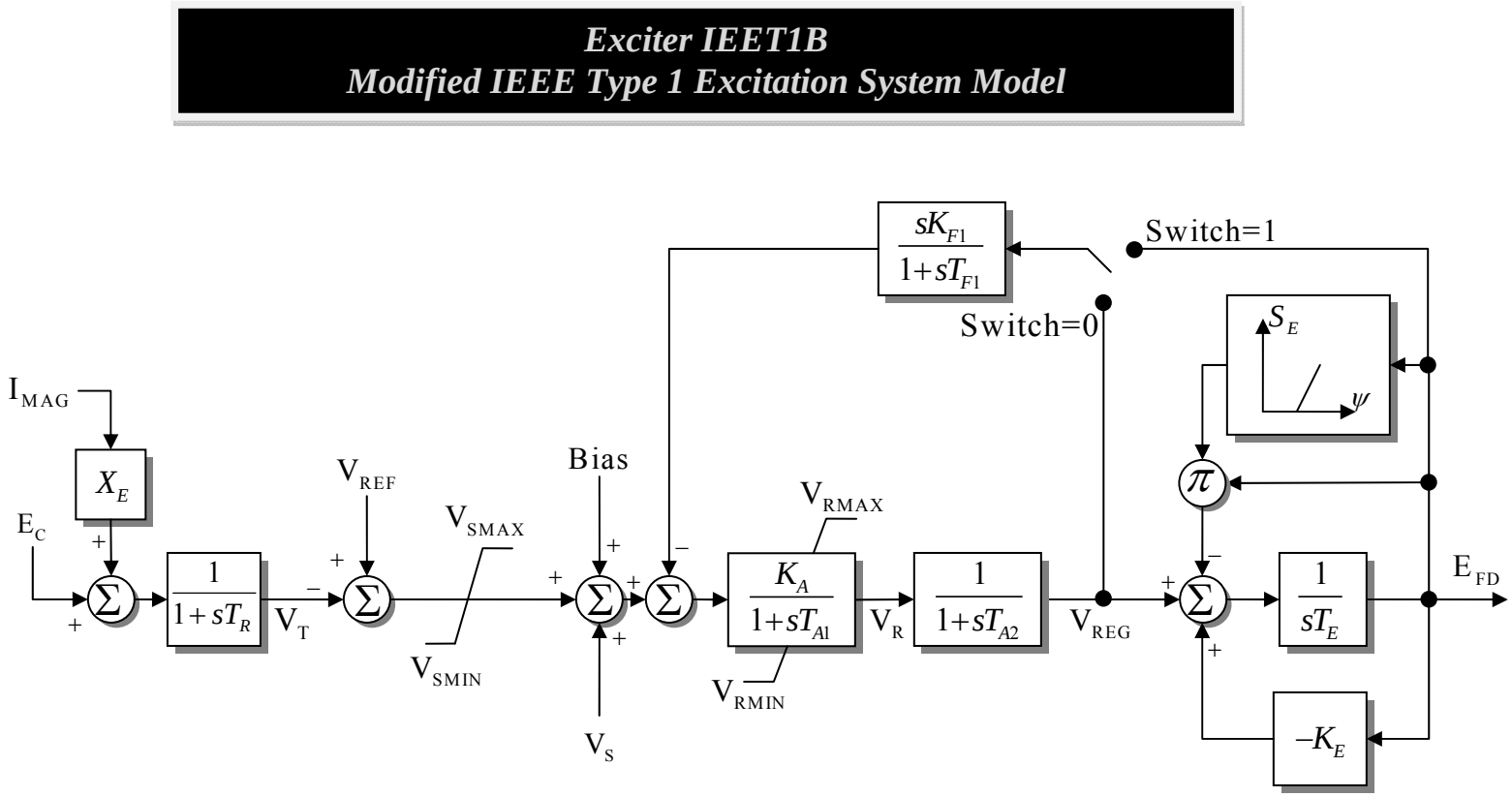

Model supported by PSSE but not implemented yet in Simulator

Exciter IEET5A

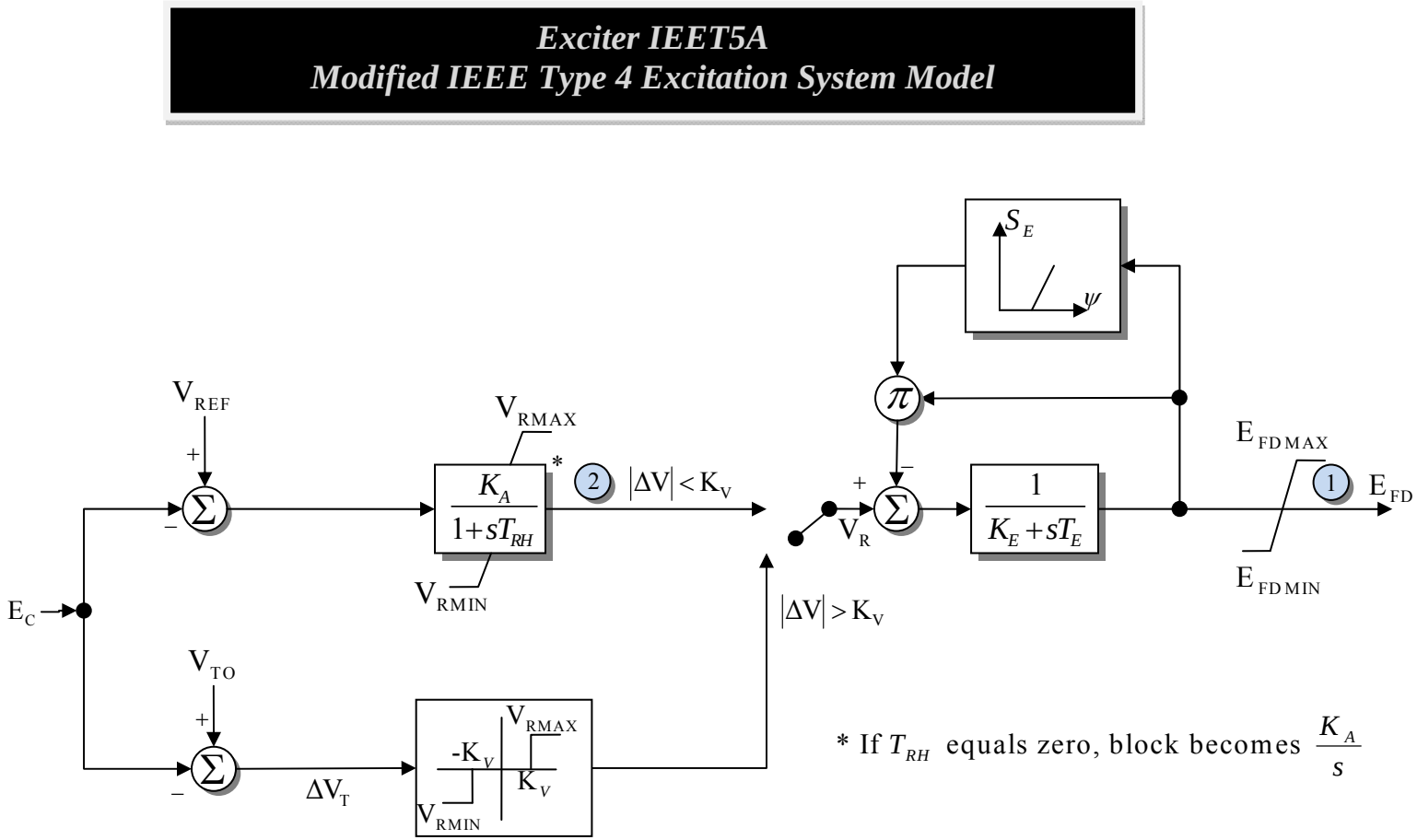

States

1 - EField

2 - V_{RH}

Model supported by PSSE

Exciter IEEX2A

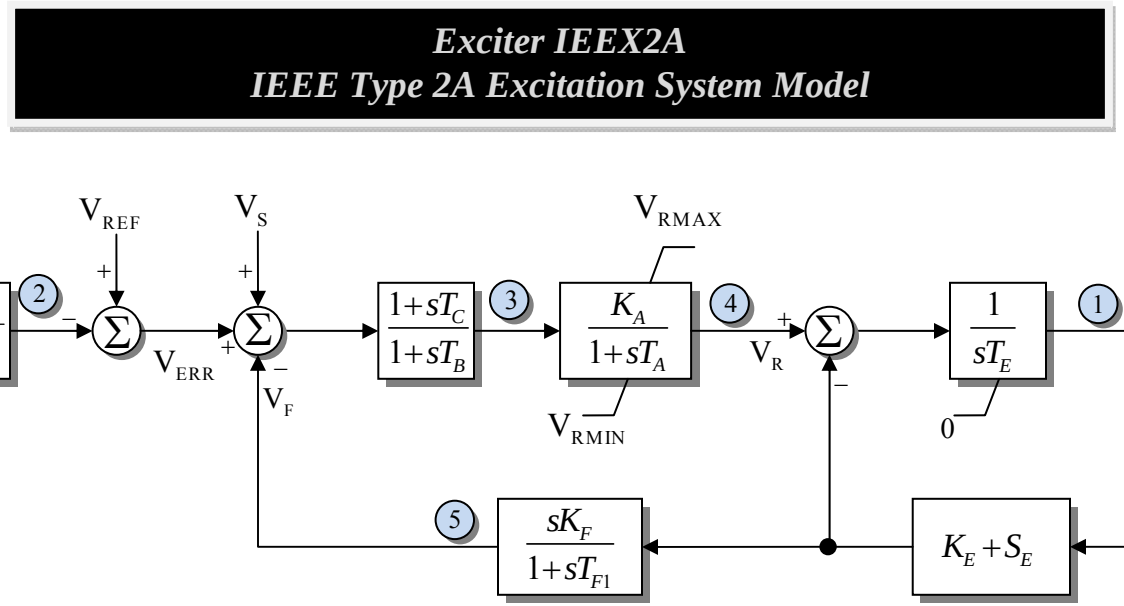

States

1 - EField

2 - Sensed V_t

3 - V_B

4 - V_R

5 - V_F

Model supported by PSSE

Exciter REXS

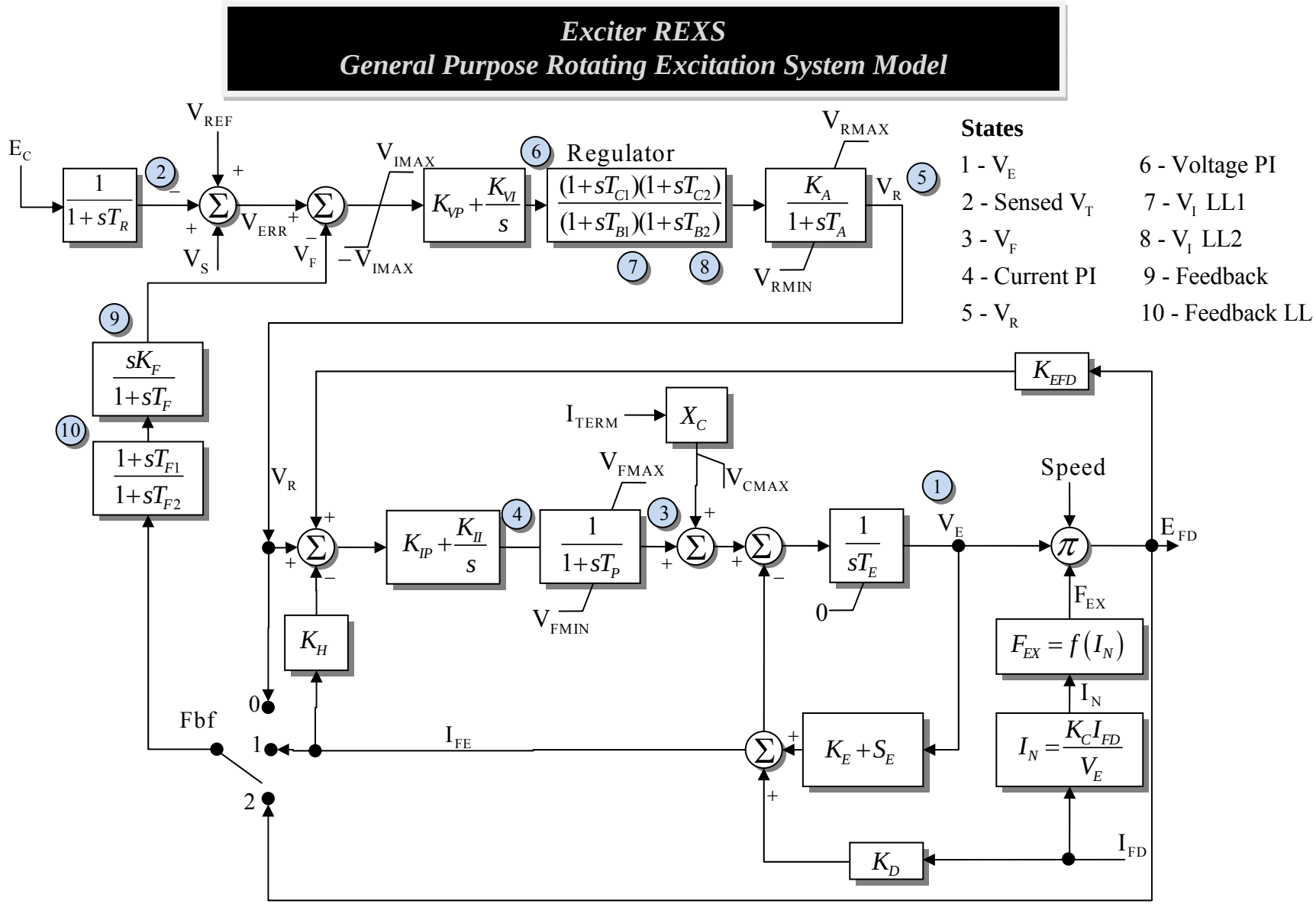

Model supported by PSLF. If flimf = 1 then multiply V_{RMIN}, V_{RMAX}, V_{FMIN}, and V_{FMAX} by V_{TERM}.

Exciter REXSY1

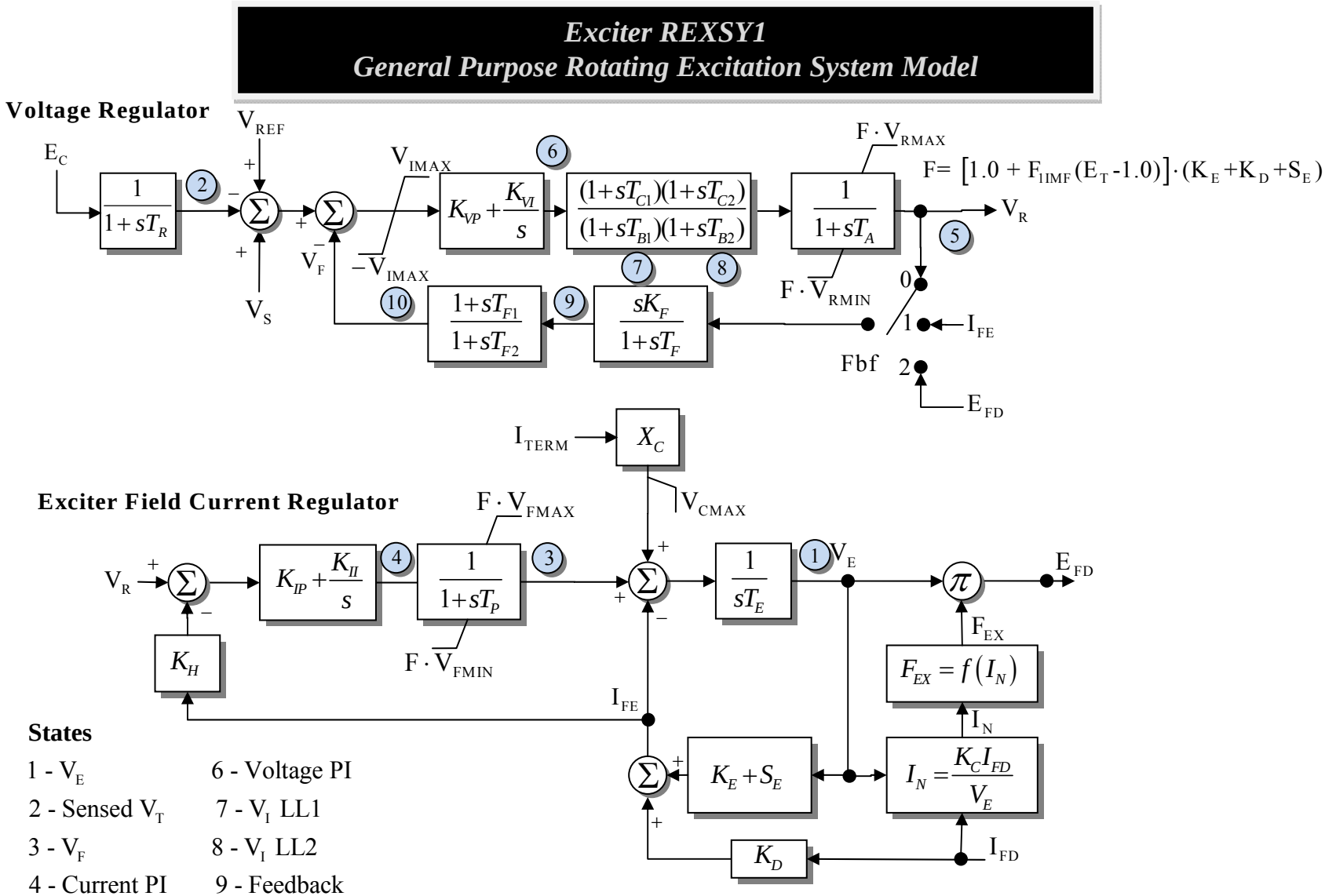

States

1 - V_E	6 - Voltage PI
2 - Sensed V_T	7 - V_I LL1
3 - V_F	8 - V_I LL2
4 - Current PI	9 - Feedback
5 - V_R	10 - Feedback LL

Model supported by PSSE

Exciter REXSYS

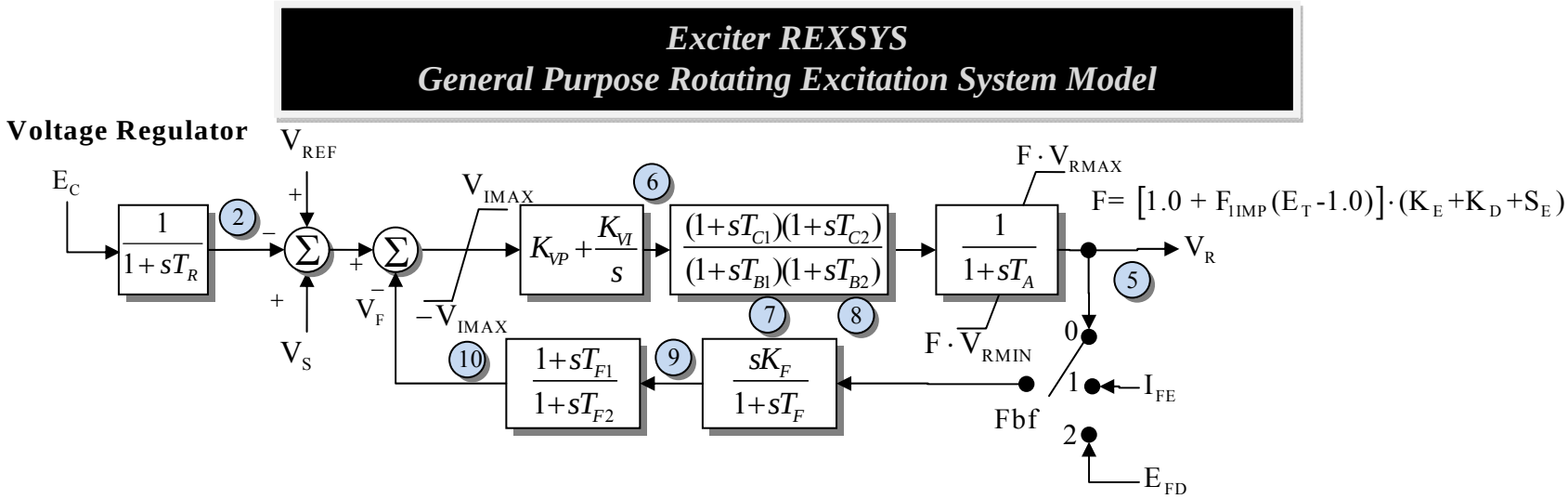

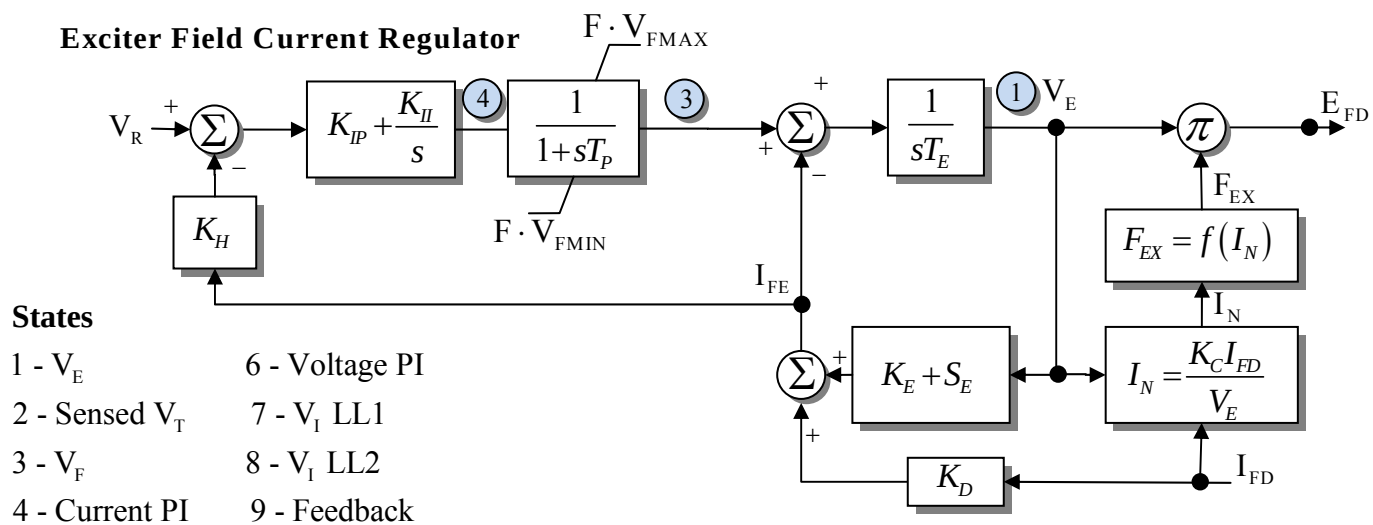

States

1 - V_E	6 - Voltage PI
2 - Sensed V_T	7 - V_I LL1
3 - V_F	8 - V_I LL2
4 - Current PI	9 - Feedback
5 - V_R	10 - Feedback LL

Model supported by PSSE

Exciter SCRX

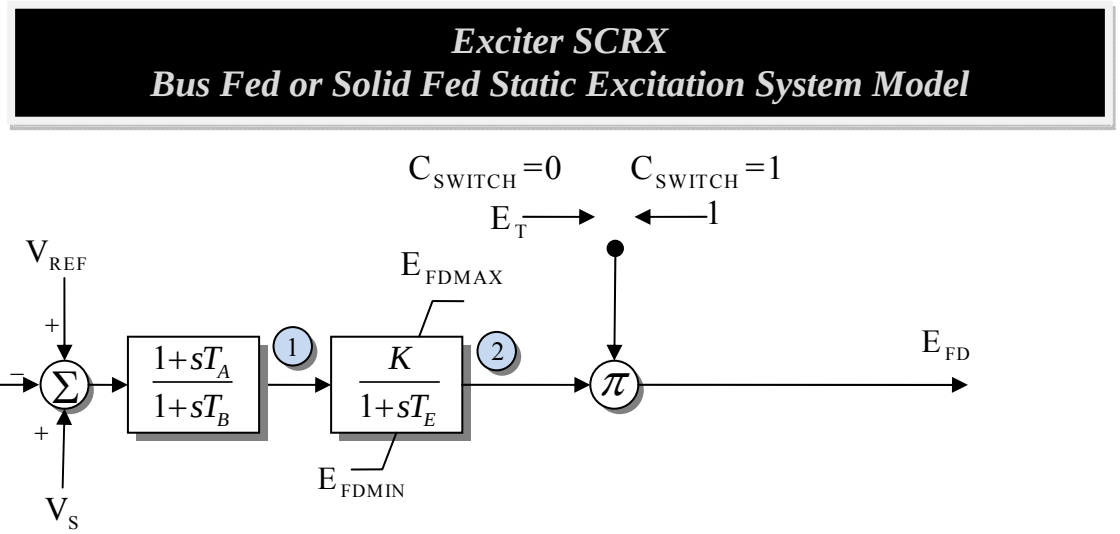

States

1 - Lead-Lag

2 - V_E

Model supported by PSLF

Model supported by PSSE has $C_{SWITCH} = 1$

Exciter SEXS_GE

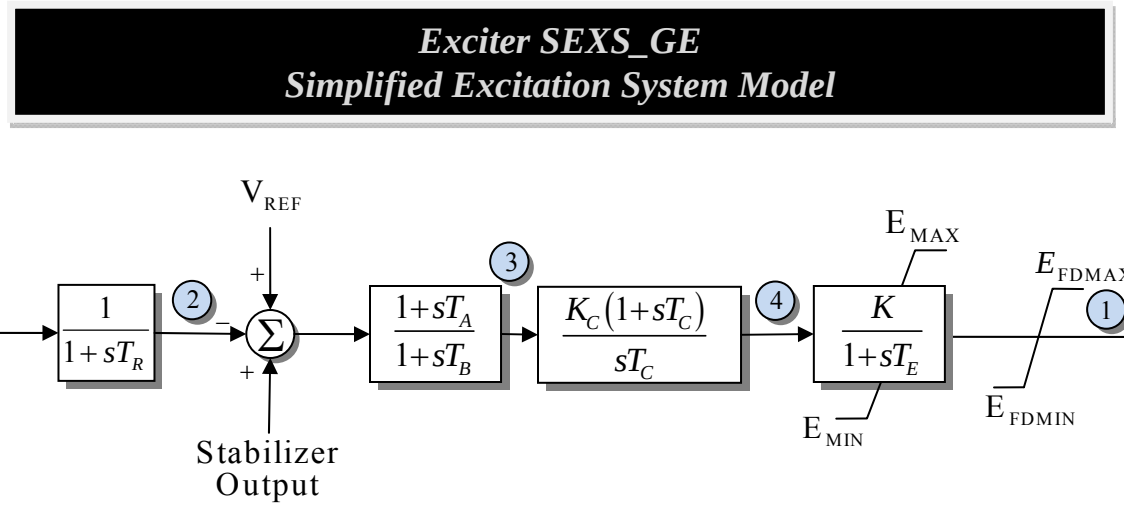

States

1 - EField

2 - Sensed V_t

3 - LL

4 - PI

Model supported by PSLF

Exciter SEXS_PTI

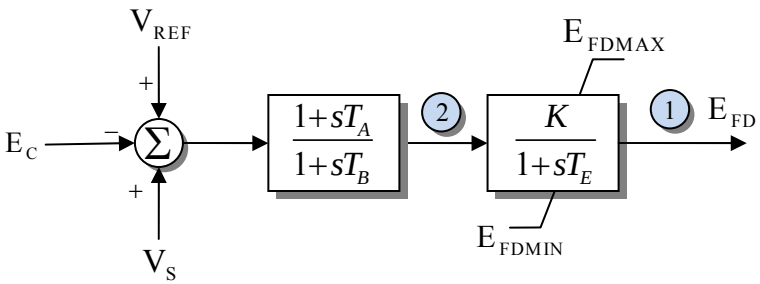

States

1 - EField

2 - LL

Model supported by PSSE

Exciter ST6B

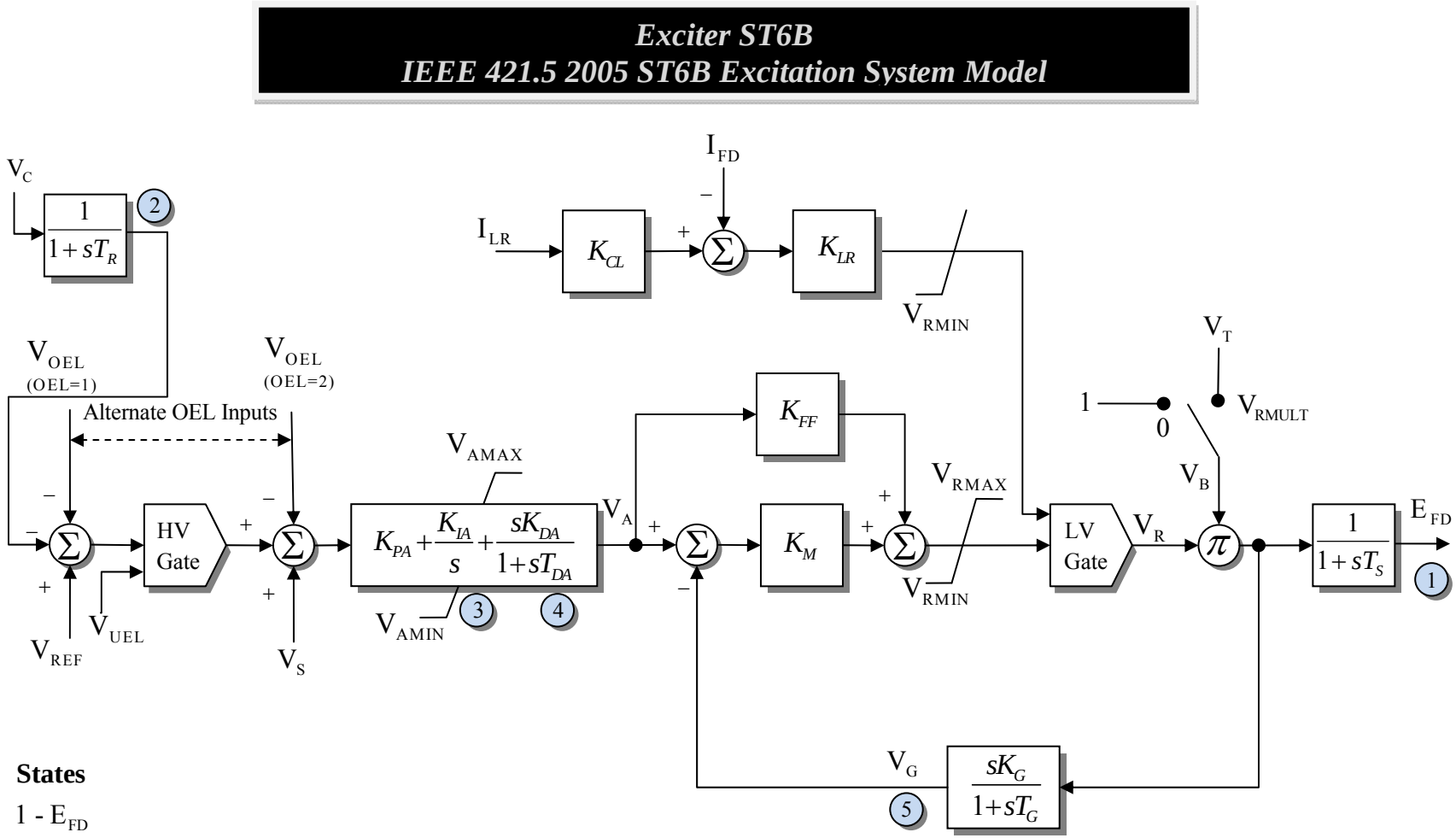

States

1 - E_{FD}

2 - Sensed V_t

3 - PID1

4 - PID2

5 - V_G

ST6B supported by PSSE

ESST6B supported by PSLF with optional V_{RMULT}

Exciter ST7B

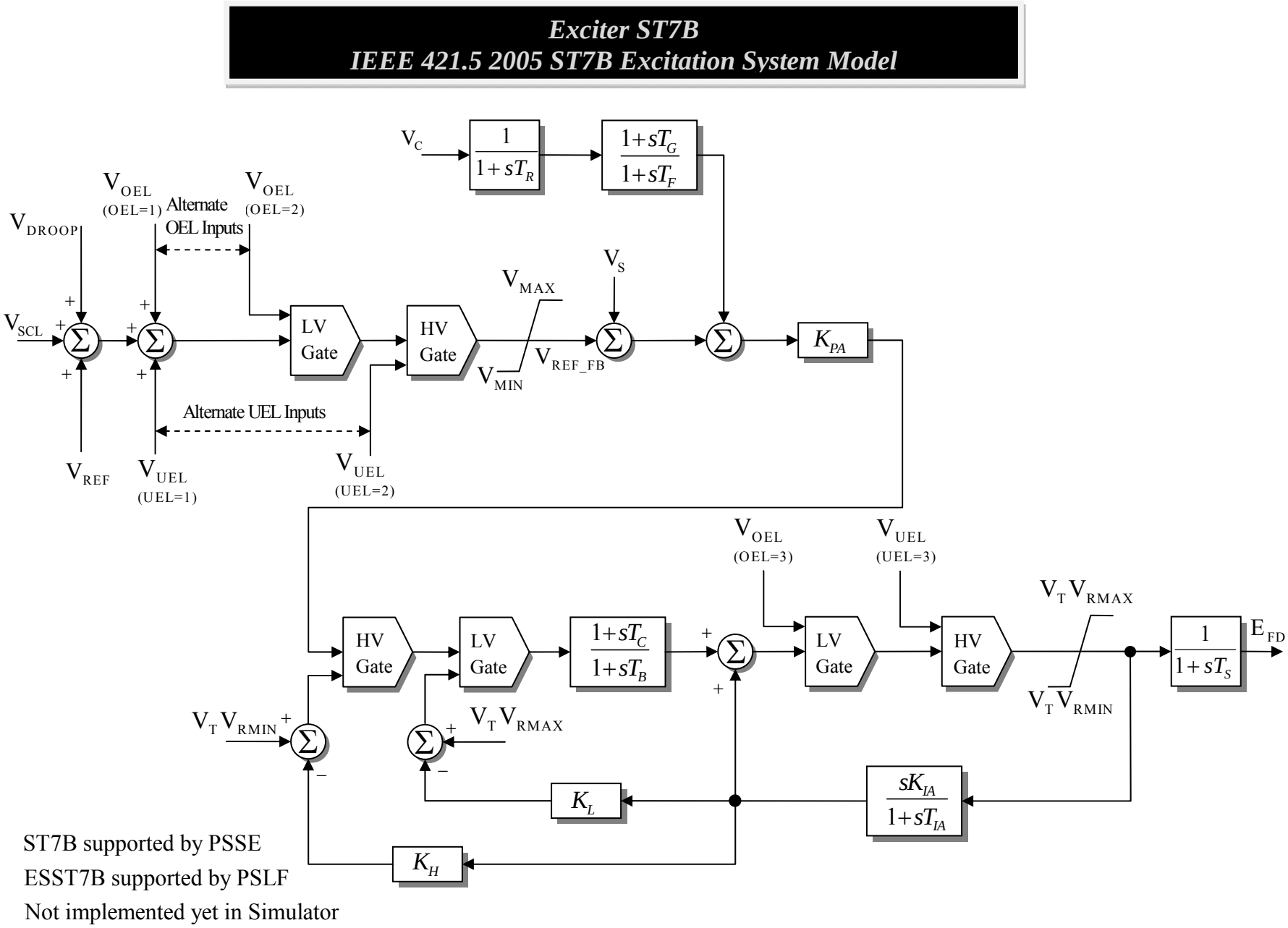

ST7B supported by PSSE

ESST7B supported by PSLF

Not implemented yet in Simulator

Exciter TEXS

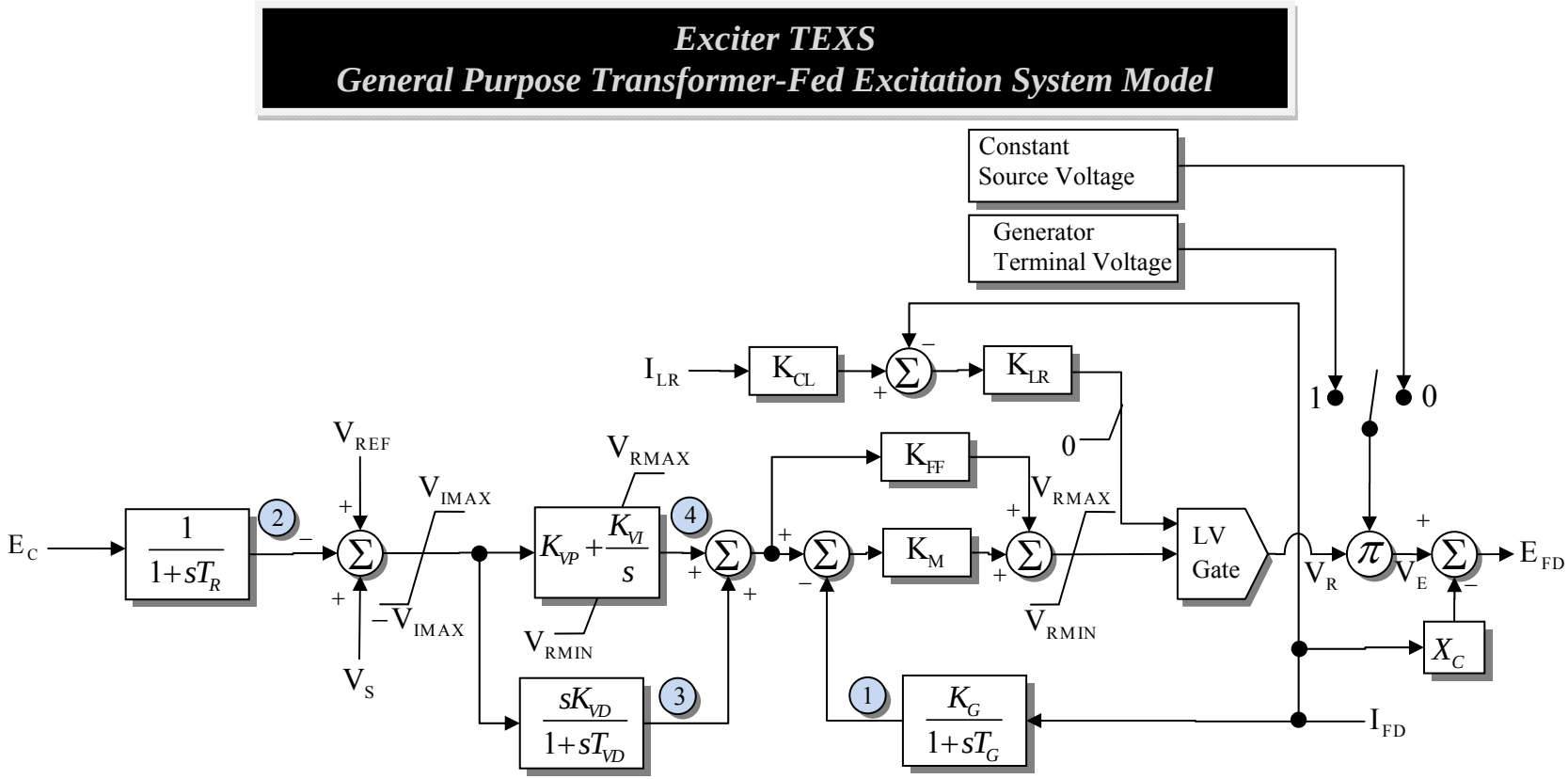

States

1 - Feedback

2 - Sensed V_t

3 - Derivative Controller

4 - Integral Controller

Model supported by PSLF

Exciter URST5T

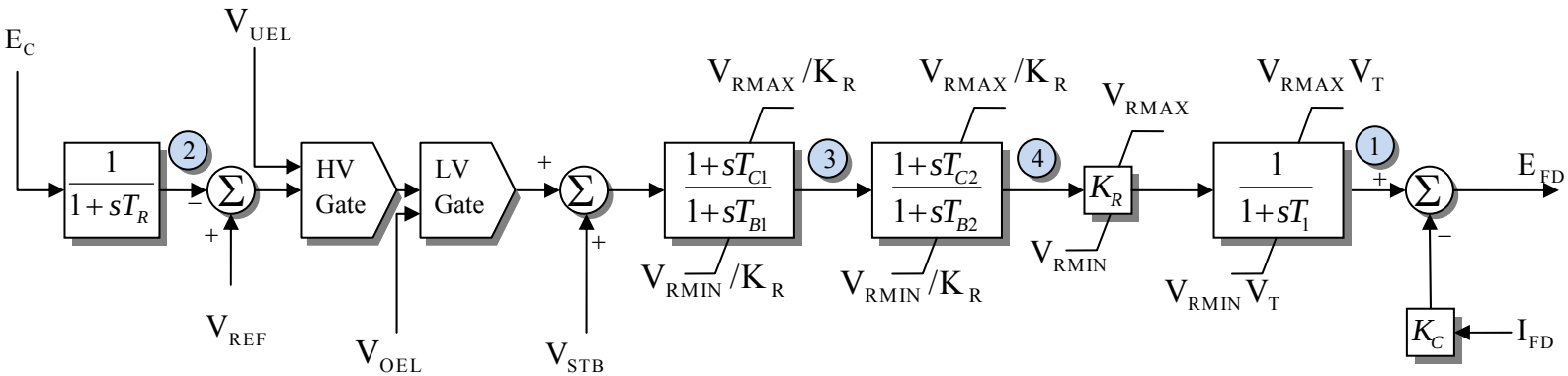

States

1 - V_R

2 - Sensed V_t

3 - LL1

4 - LL2

Model supported by PSSE

Exciter WT2E1

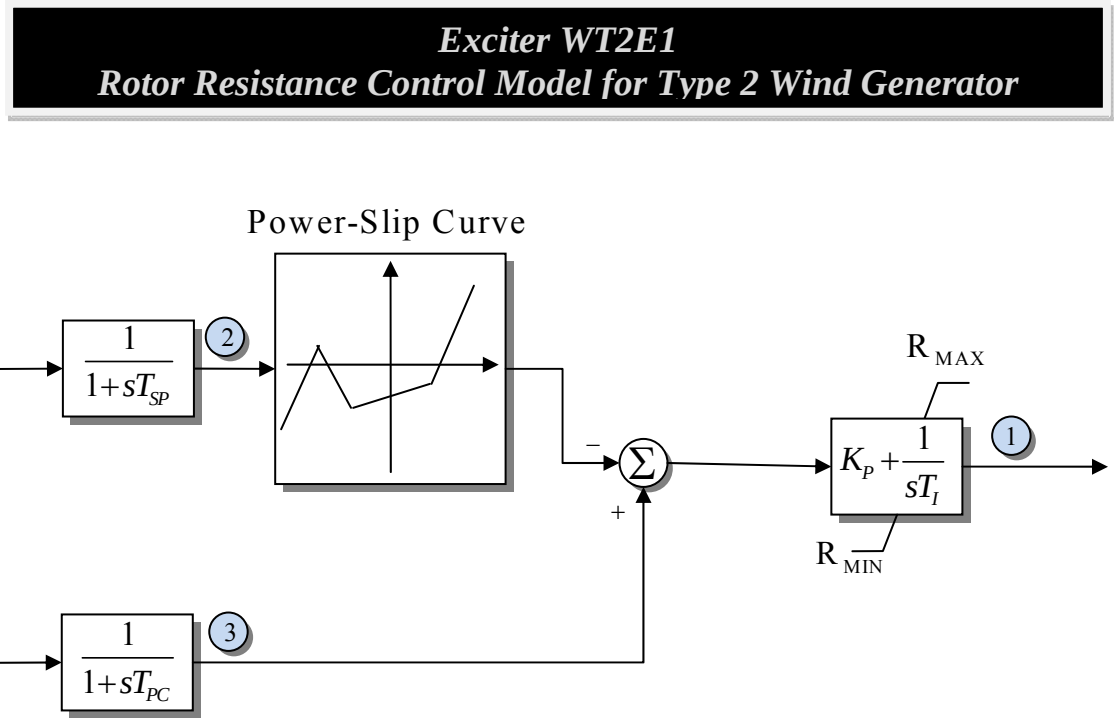

States

1 - $R_{external}$

2 - Speed

3 - P_{elec}

Model supported by PSSE

Exciter WT3E and WT3E1

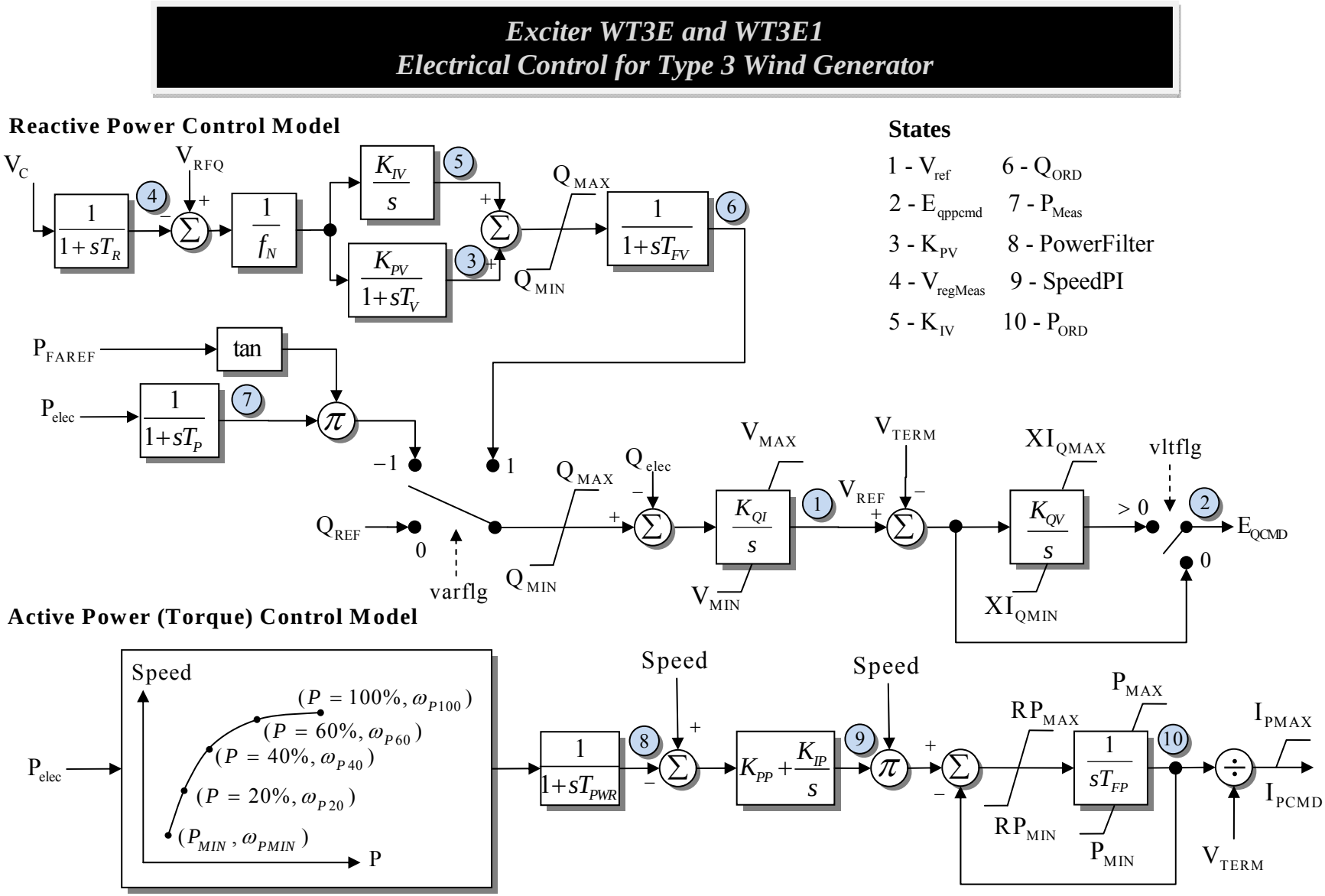

WT3E supported by PSLF with $RP_{MAX} = P_{wrat}$ and $RP_{MIN} = -P_{wrat}$, $T_{FV} = T_C$

WT3E1 supported by PSSE uses vltflg to determine the limits on E_{QCMD}. When vltflg > 0 Simulator always uses XI_{QMAX} and XI_{QMIN}.

Exciter WT4E1

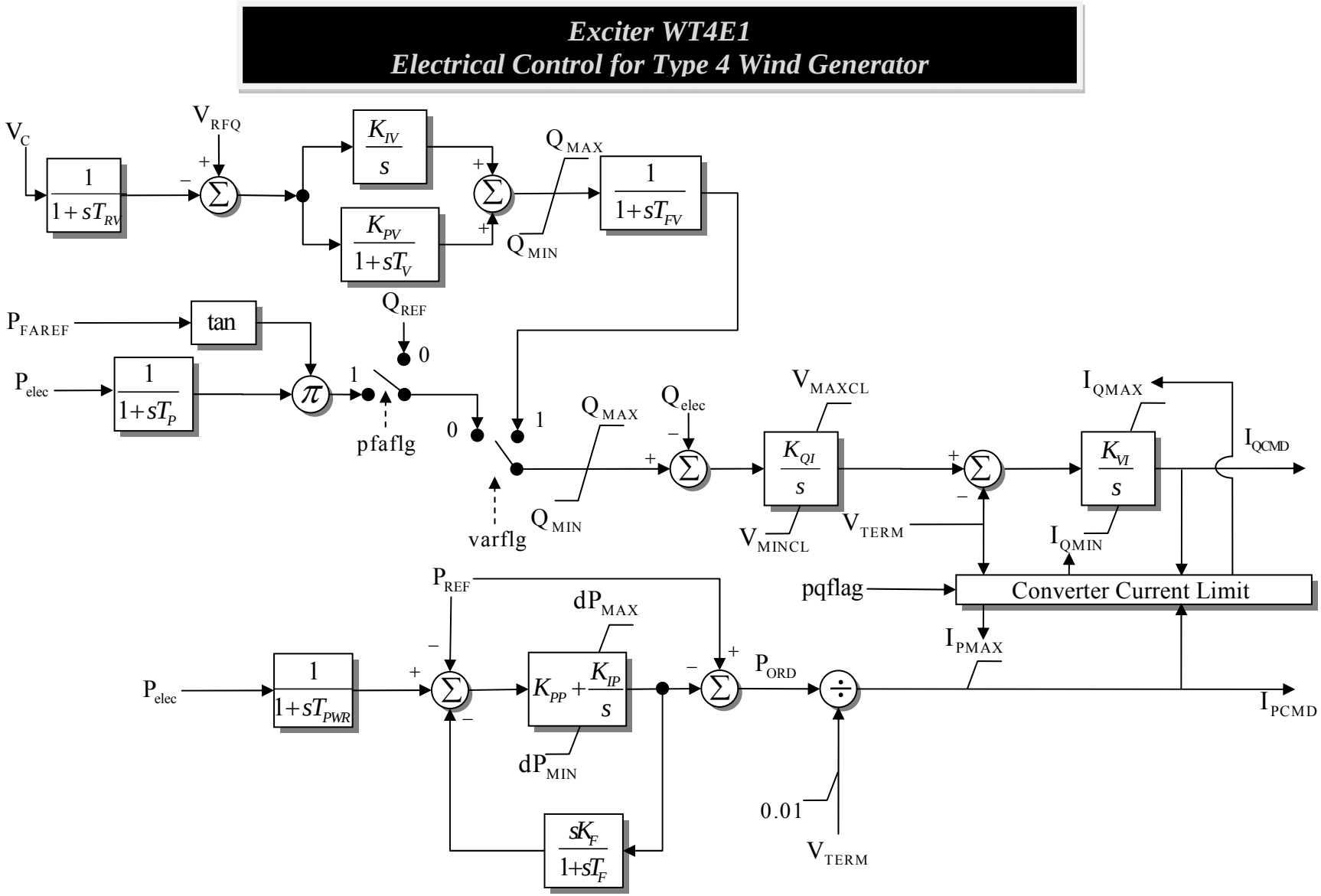

Model supported by PSSE but not yet implemented in Simulator

Machine Model CSVGN1

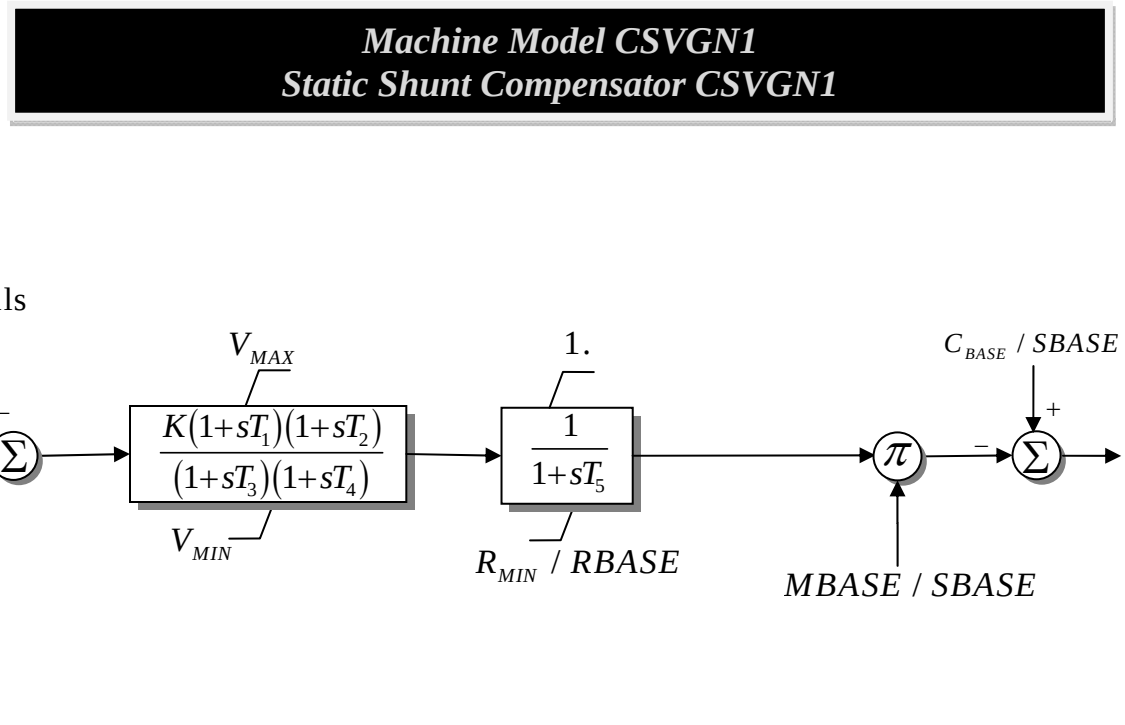

$RBASE = MBASE$

Note : $|V|$ is the voltage magnitude on the high side of generator step-up transformer if present.

Model supported by PSSE

Machine Model CSVGN3

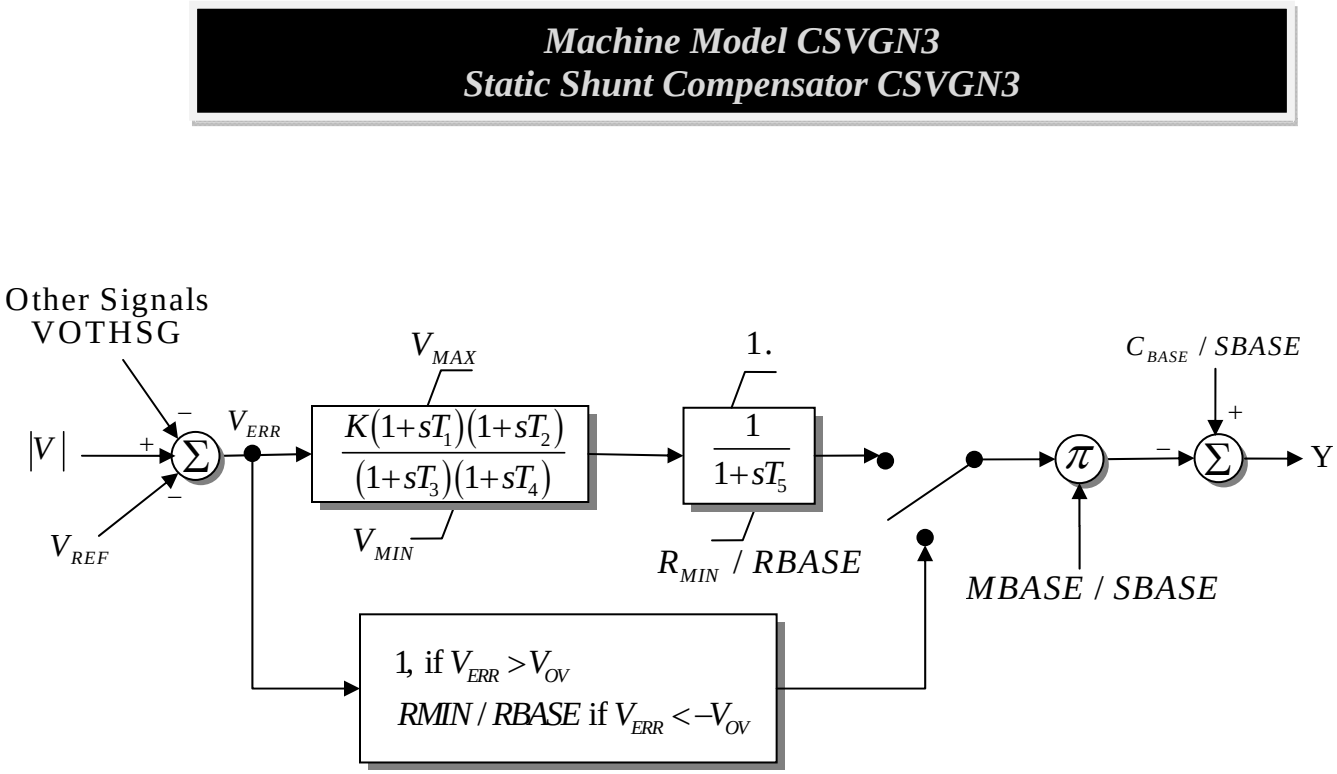

$RBASE = MBASE$

Note : $|V|$ is the voltage magnitude on the high side of generator step-up transformer if present.

Model supported by PSSE

Machine Model CSVGN4

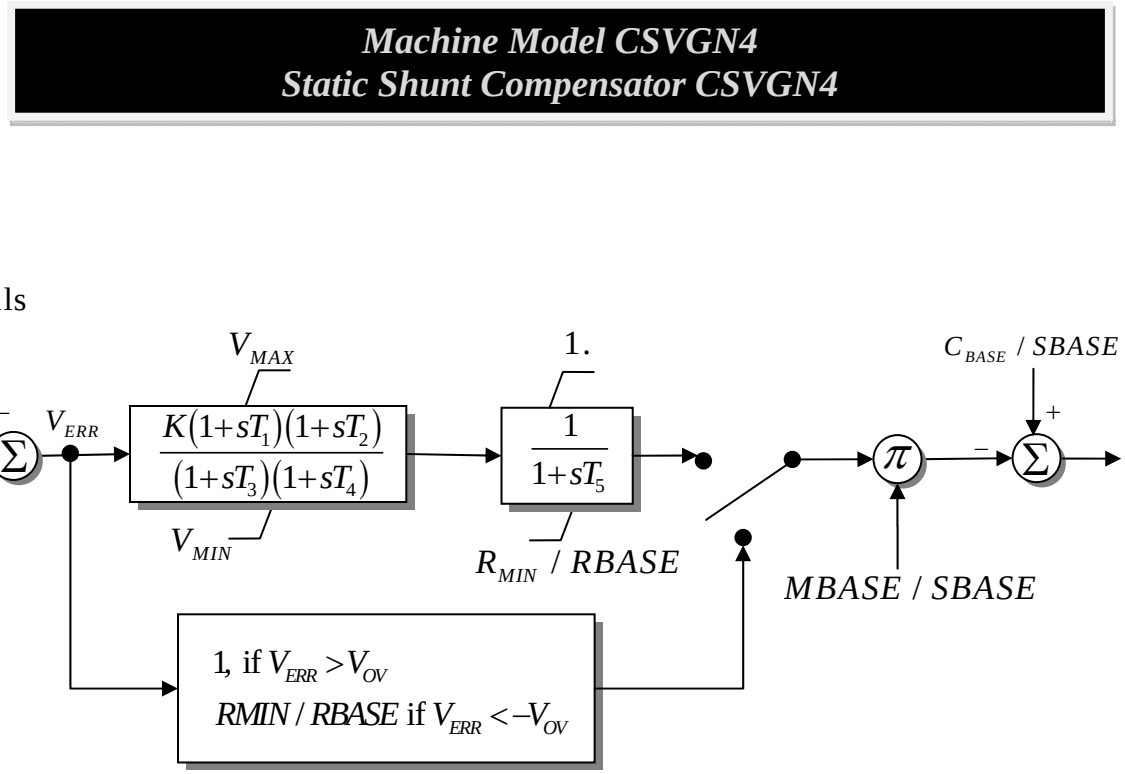

$RBASE = MBASE$

Model supported by PSSE

Machine Model CSVGN5

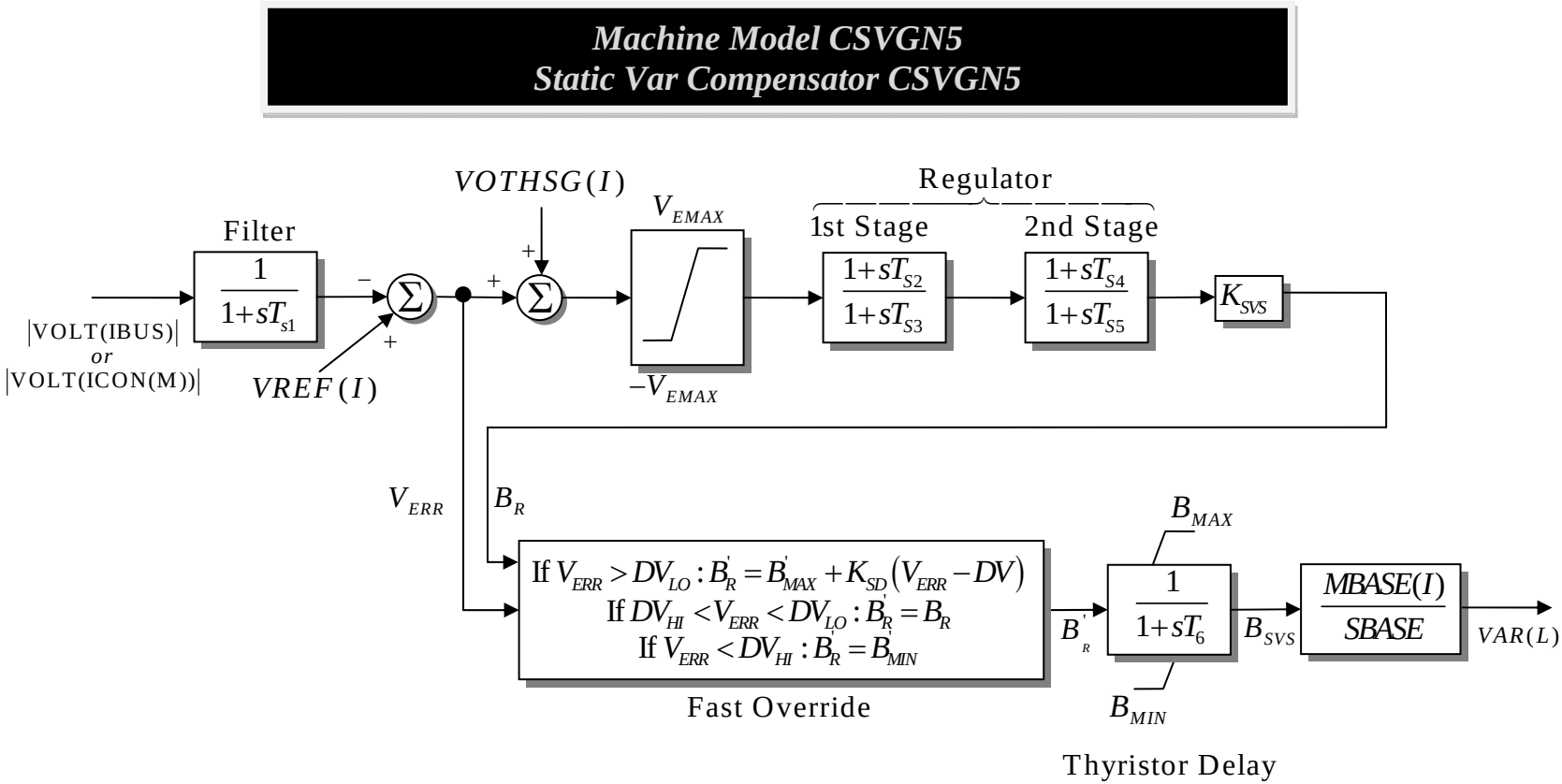

If $DV = 0$,

$$DV_{LO} = B'_{MAX} / K_{SVS}$$

$$DV_{HI} = B'_{MIN} / K_{SVS}$$

If $DV > 0$,

$$DV_{LO} = DV$$

$$DV_{HI} = -DV$$

Model supported by PSSE

Machine Model CSVGN6

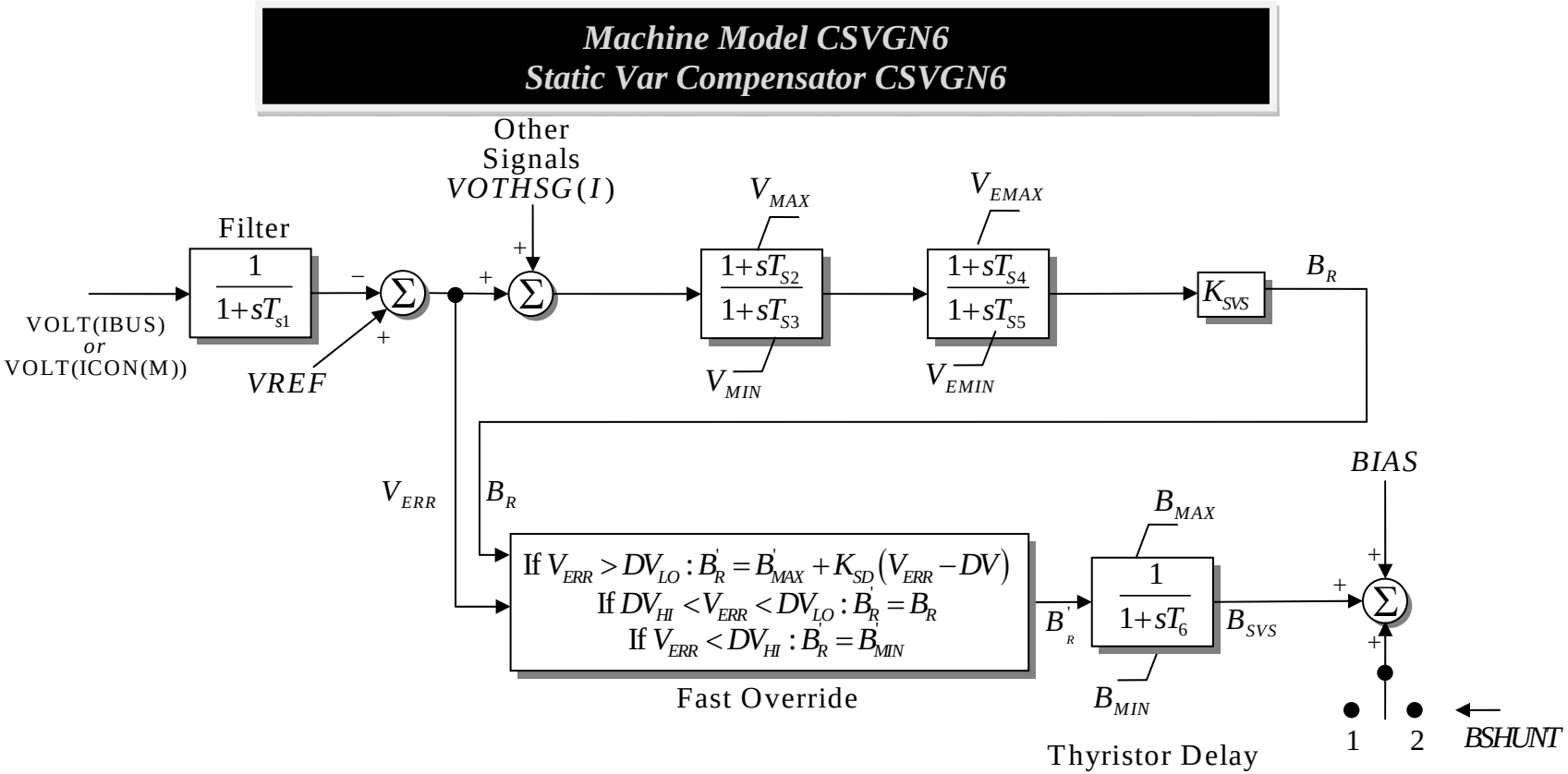

Position 1 is normal (open)
If $V_{ERR} > DV2$, switch will close after *TDELAY* cycles.

If $DV = 0$,

$$DV_{LO} = B'_{MAX} / K_{SVS}$$

$$DV_{HI} = B'_{MIN} / K_{SVS}$$

If $DV > 0$,

$$DV_{LO} = DV$$

$$DV_{HI} = -DV$$

Model supported by PSSE

Machine Model GENCC

Machine Model GENCC
Generator represented by uniform inductance ratios rotor modeling to match WSCC type F

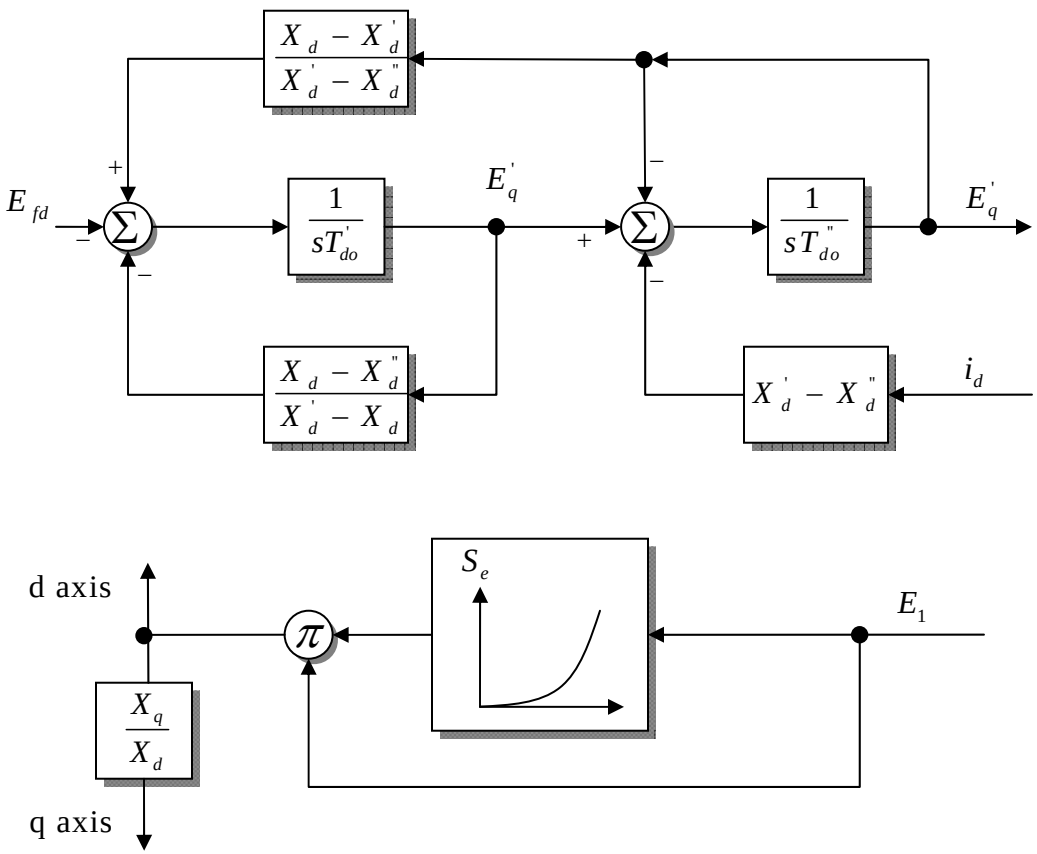

Model supported by PSLF

Machine Model GENCLS

Machine Model GENCLS
Synchronous machine represented by "classical" modeling or Thevenin Voltage Source to play Back known voltage/frequency signal

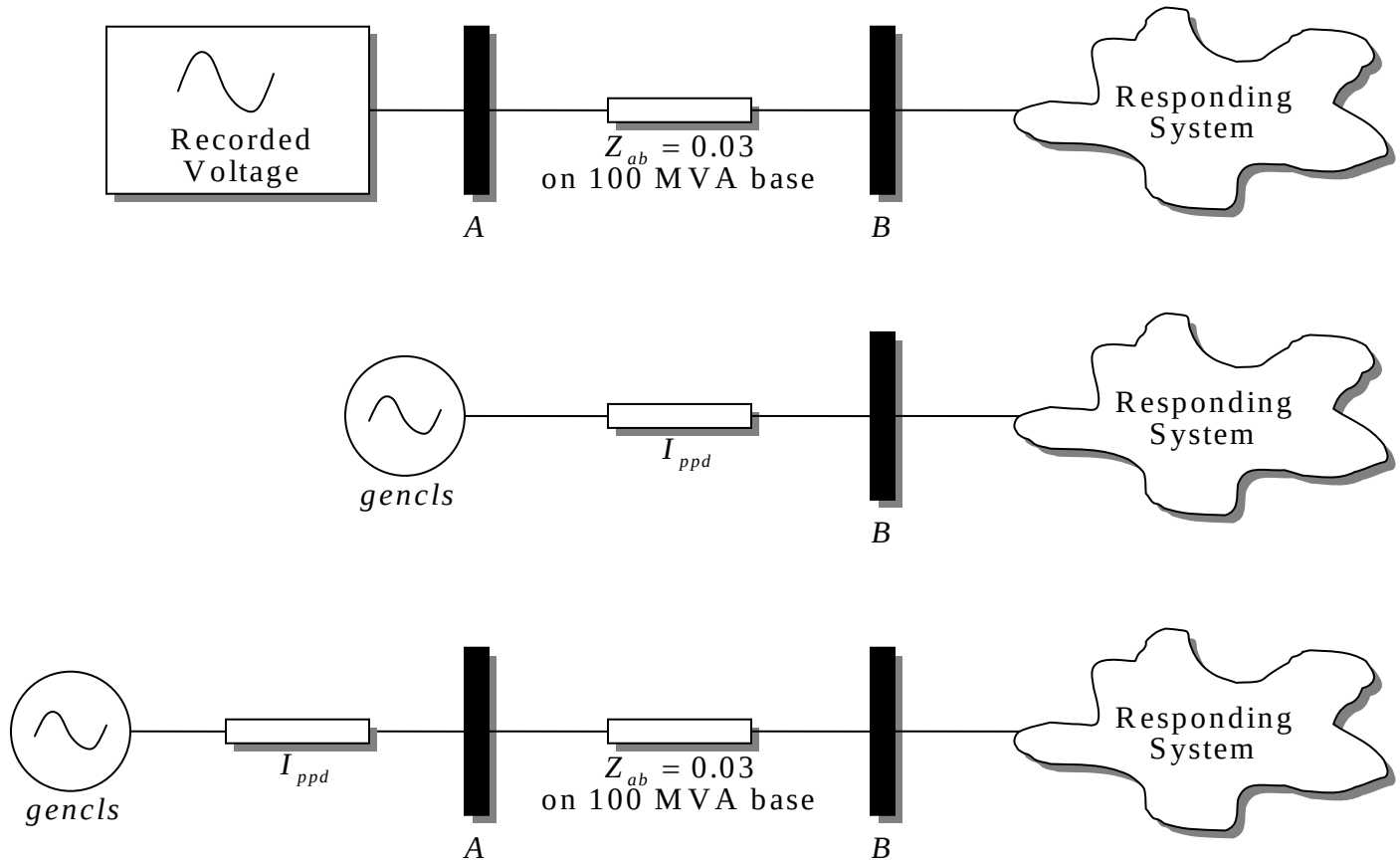

Model supported by PSLF

Machine Model GENROU

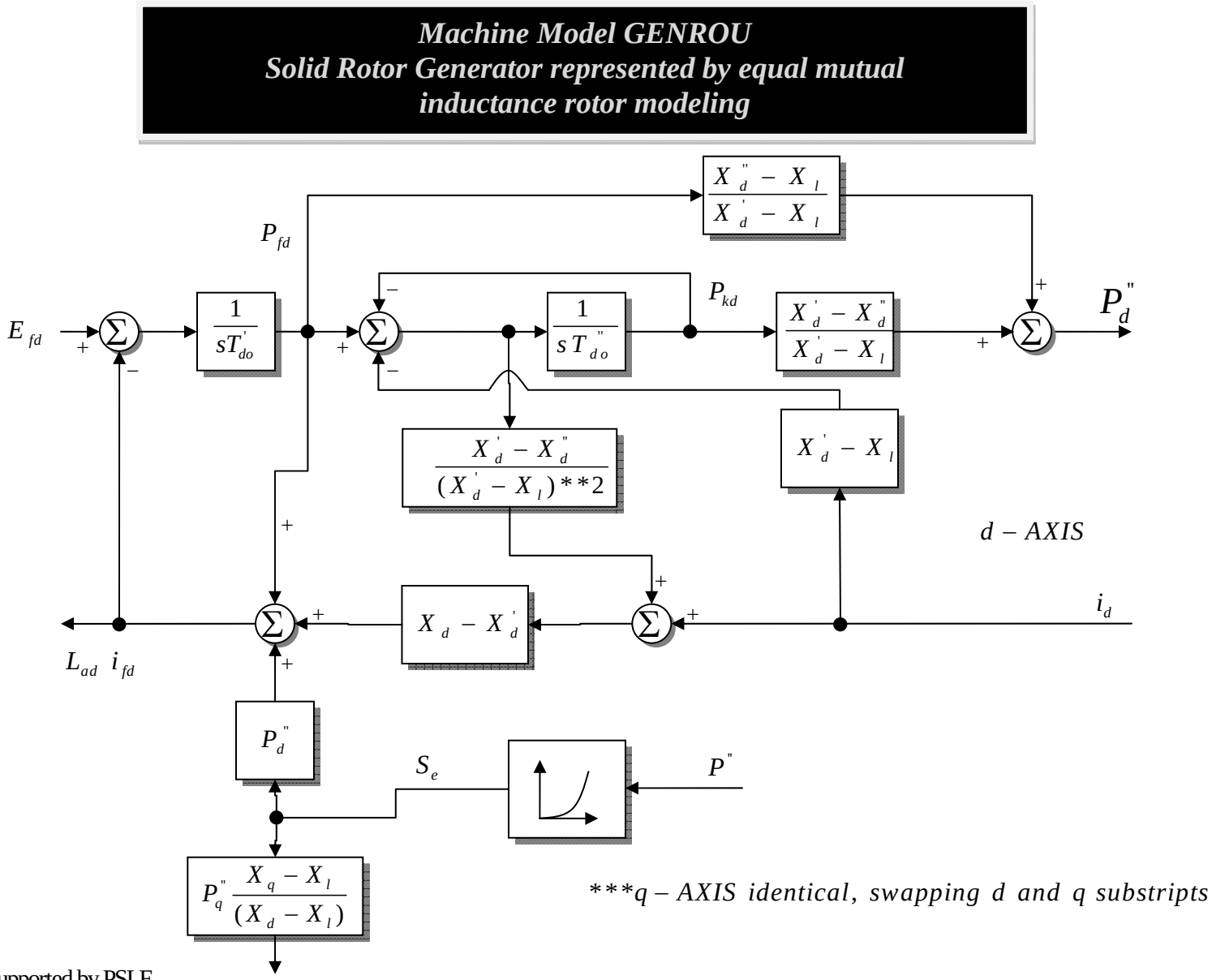

Model supported by PSLF

Machine Model GENSAL

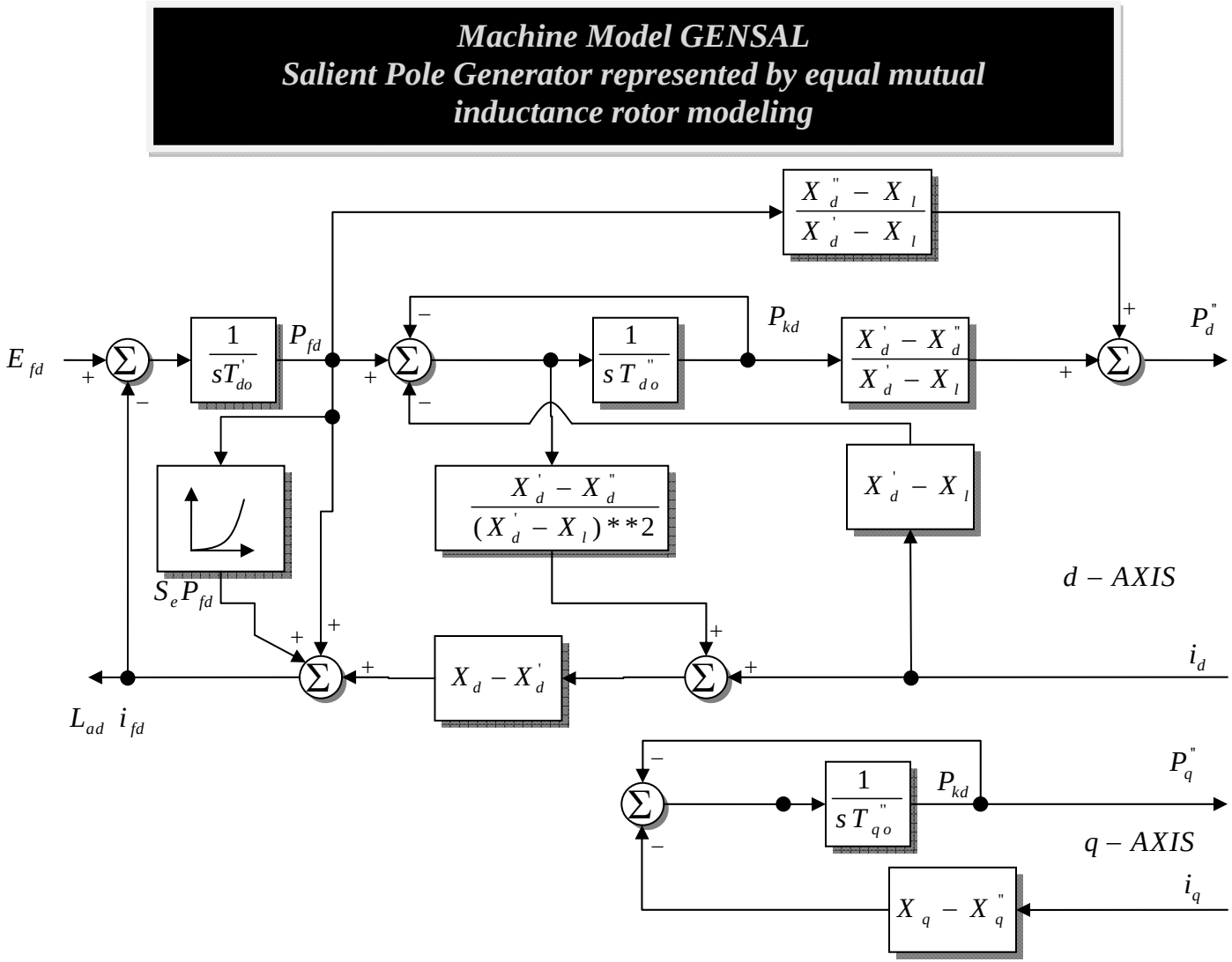

Model supported by PSLF

Machine Model GENTPF

Machine Model GENTPF
Generator represented by uniform inductance ratios rotor modeling to match WSCC type F

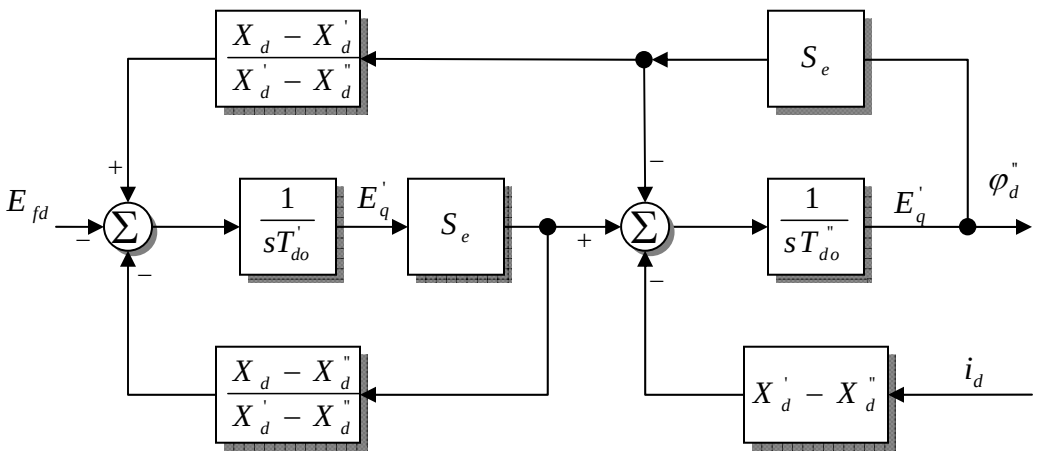

$$S_e = 1. + fsat\left(\varphi_{ag}\right)$$

Q – Axis Similar except:

$$S_e = 1. + \frac{X_q}{X_d}\left(\varphi_{ag}\right)$$

Model supported by PSLF

Machine Model GENTRA

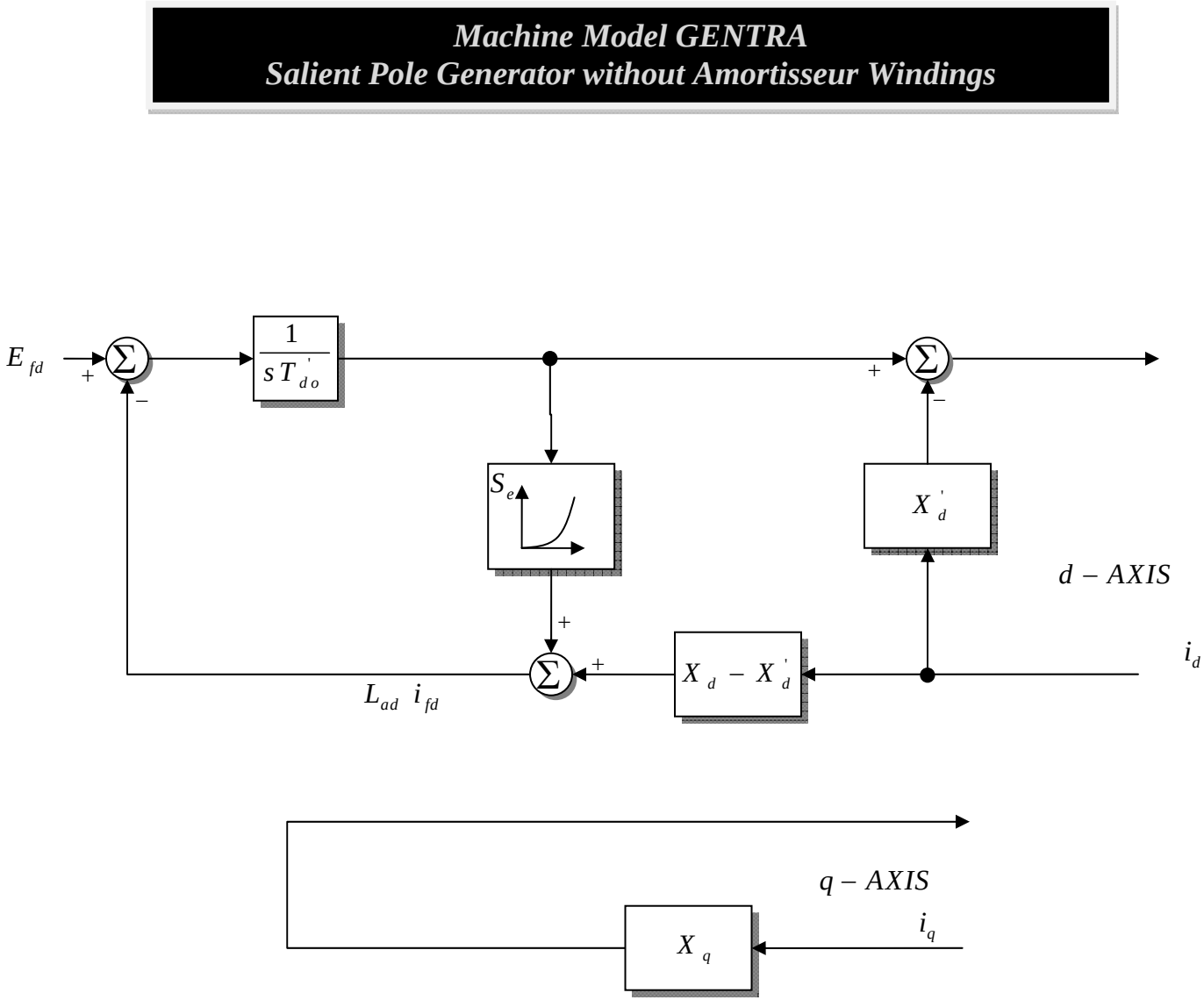

Model supported by PSLF

Machine Model GENWRI

Machine Model GENWRI
Wound-rotor Induction Generator Model with Variable External Rotor Resistance

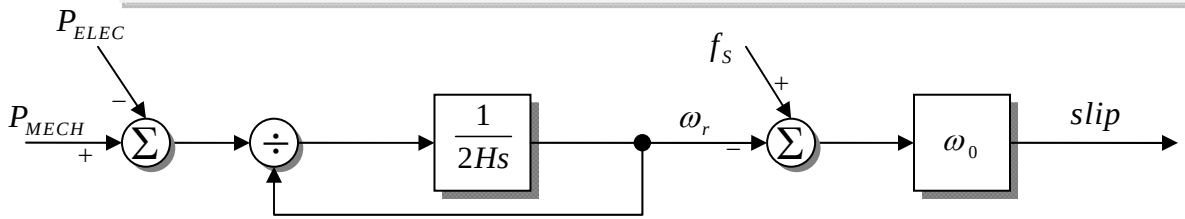

$$R2Tpo = \frac{(L_s - L_l)}{\omega_0 (L_s - L')}$$

$$T_0' = \frac{R2Tpo}{(R2ex + R2)}$$

$$\dot{\varphi}_{fd} = -\frac{\left(\varphi_{fd} + S_d + (L_s - L')i_d\right)}{T_0'} + (slip)\varphi_{fq}$$

$$\dot{\varphi}_{fq} = -\frac{\left(\varphi_{fq} + S_q + (L_s - L')i_q\right)}{T_0'} + (slip)\varphi_{fd}$$

$$\varphi_d' = \varphi_{fd}$$

$$\varphi_q' = \varphi_{fq}$$

R2Tpo is a constant which is equal to T_0' times the total rotor resistance.

R2 is the internal rotor resistance

R2ex is the internal rotor resistance

$$e_q = \omega_s \varphi_d' - L' i_d - R_a i_q$$

$$e_d = -\omega_s \varphi_q' + L' i_q - R_a i_d$$

$$\varphi' = \sqrt{(\varphi_d')^2 + (\varphi_q')^2}$$

$$S_e = f_{sat}(\varphi')$$

$$S_d = S_e(\varphi_d')$$

$$S_q = S_e(\varphi_d')$$

Model supported by PSLF

Machine Model GEWTG

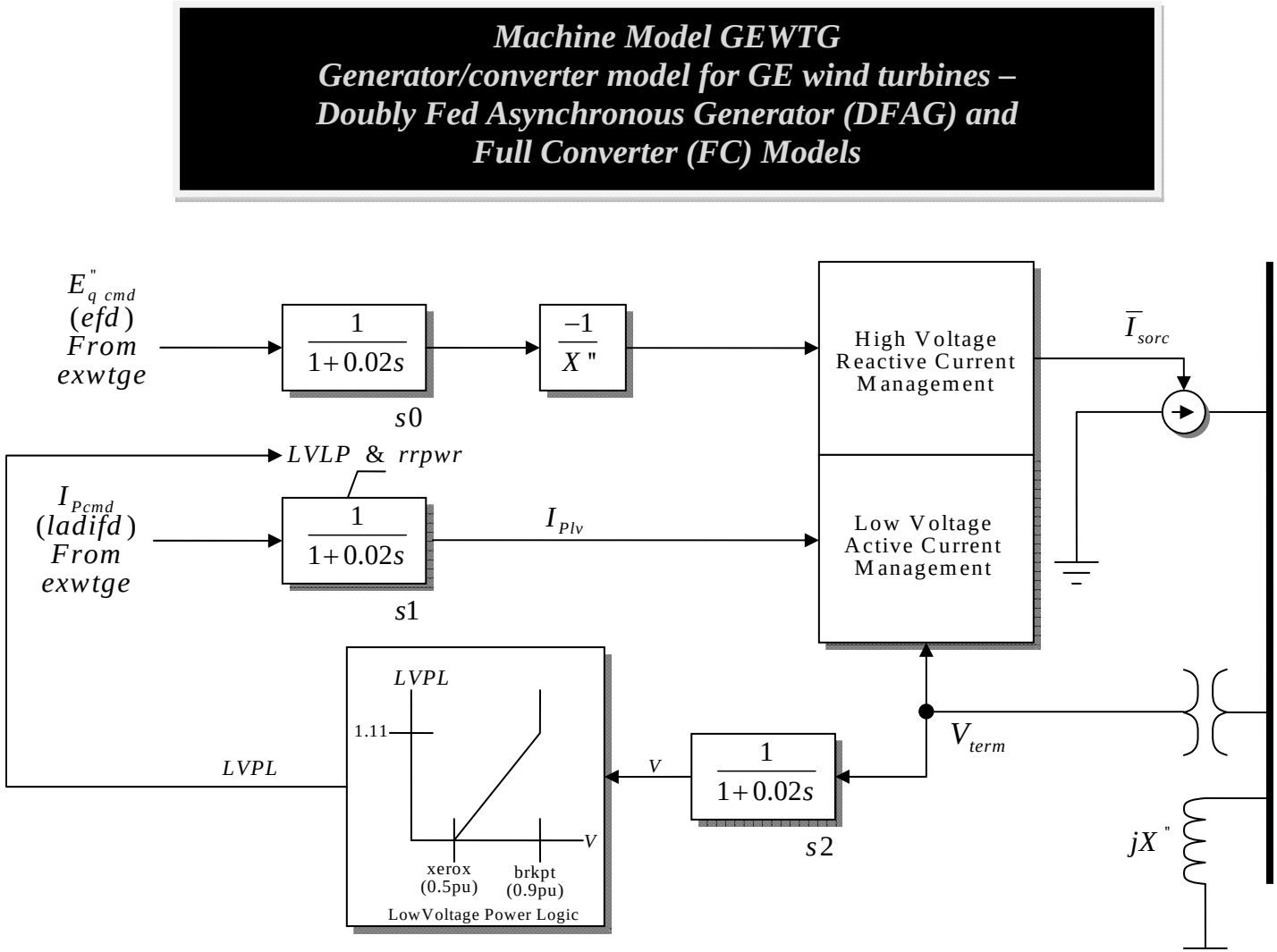

Figure 1. DFAG Generator / Converter Model

Model supported by PSLF

Machine Model GEWTG
Generator/converter model for GE wind turbines – Doubly Fed Asynchronous Generator (DFAG) and Full Converter (FC) Models

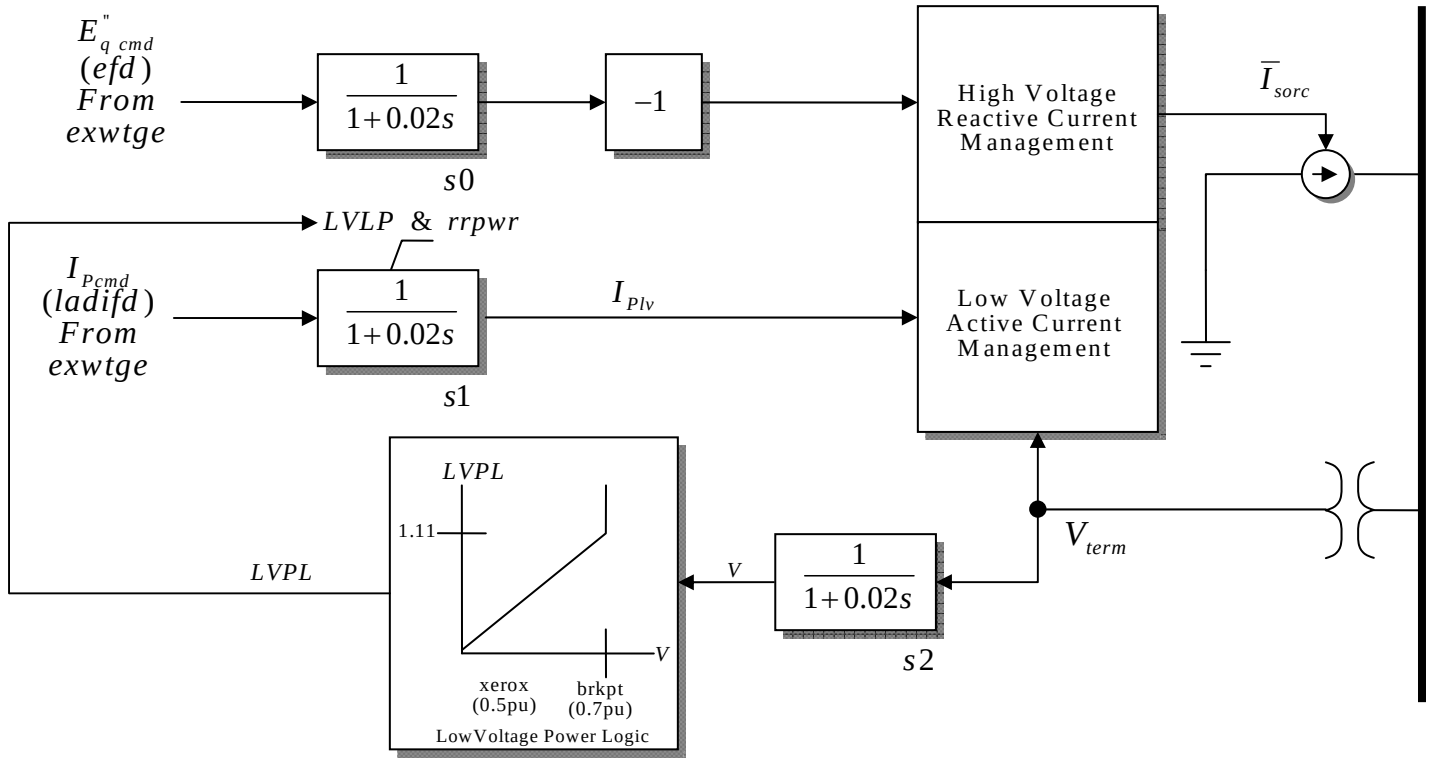

Figure 1. Full Converter Generator / Converter Model

Model supported by PSLF

Machine Model MOTOR1

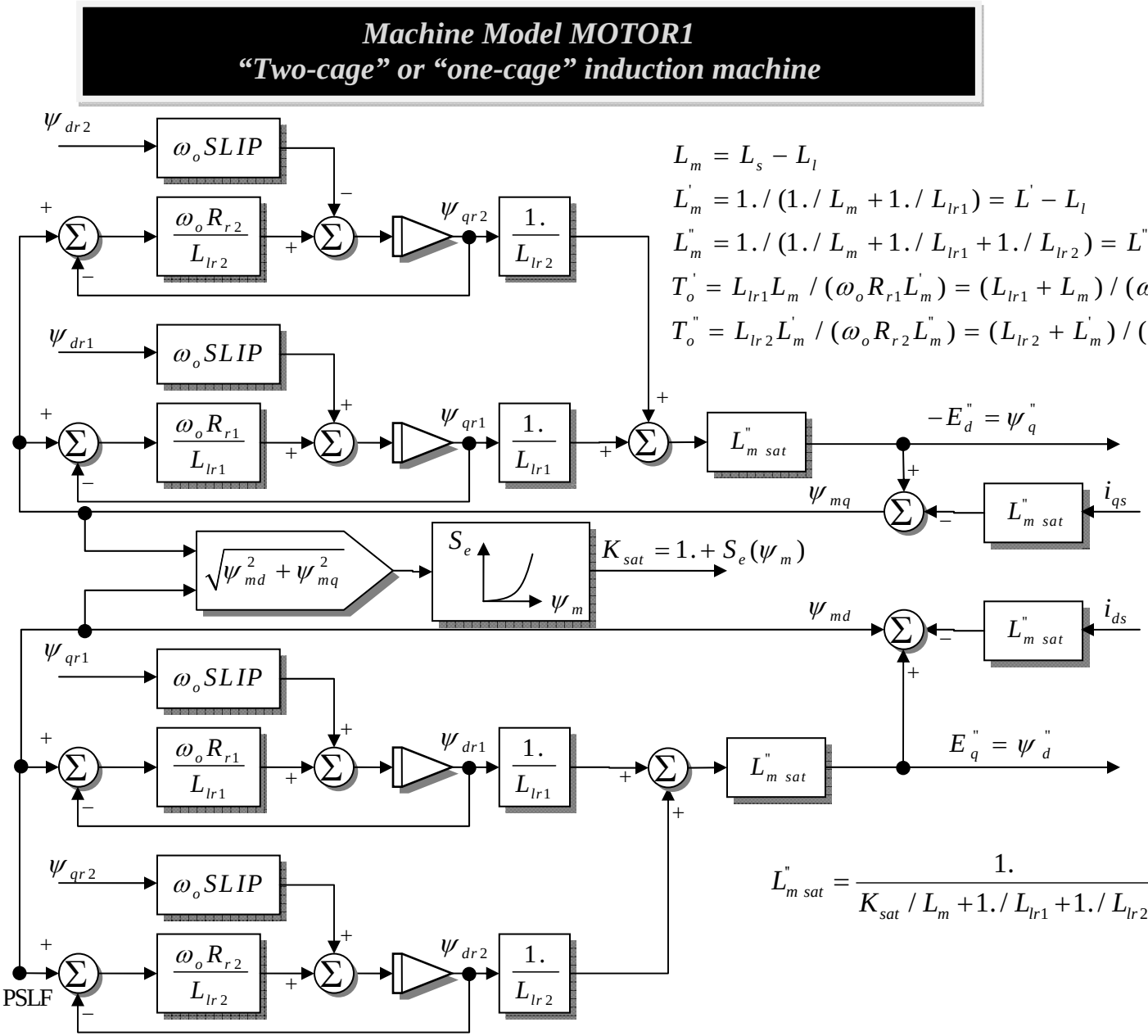

Model supported by PSLF

Machine Model SVCWSC

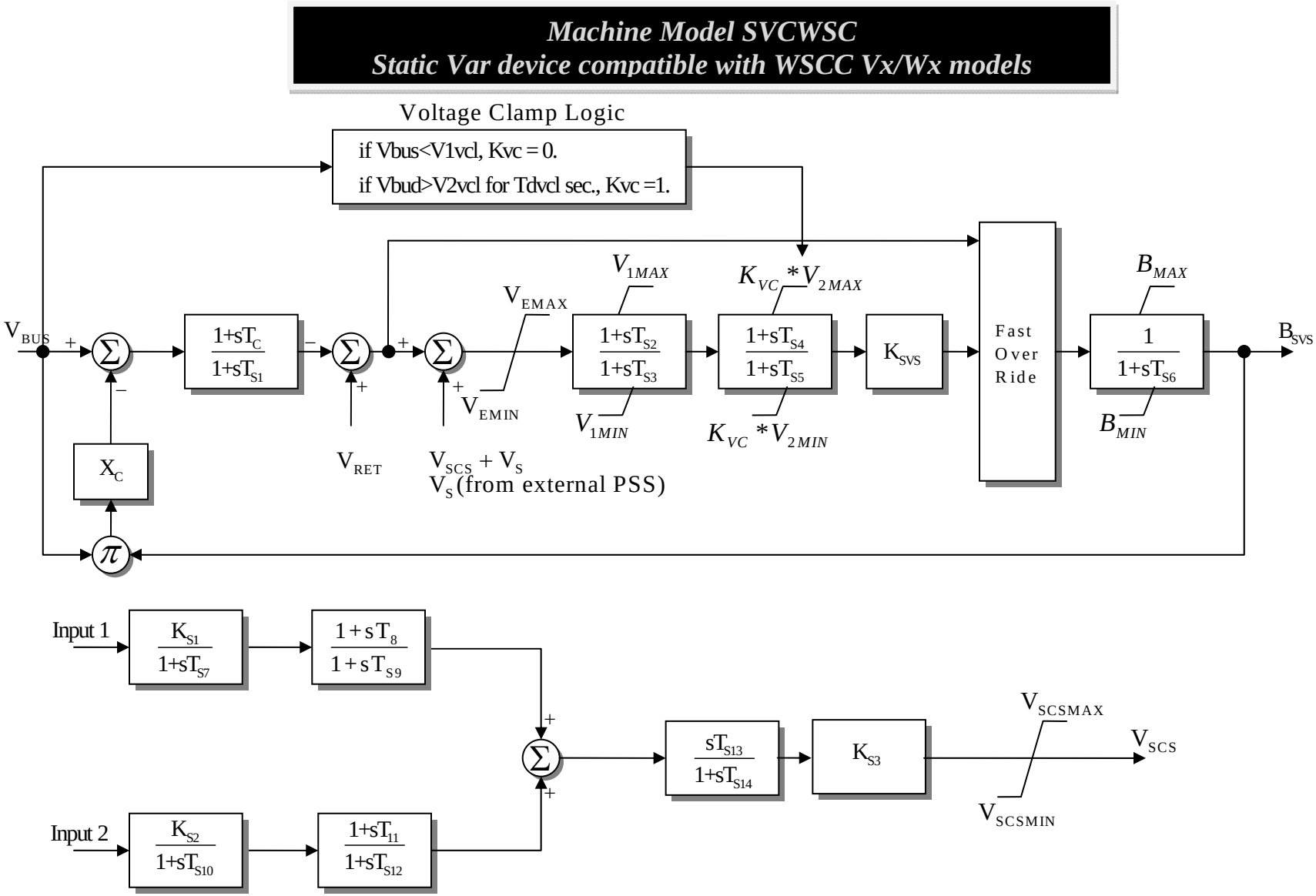

Model supported by PSLF

Generator Other Model LCFB1

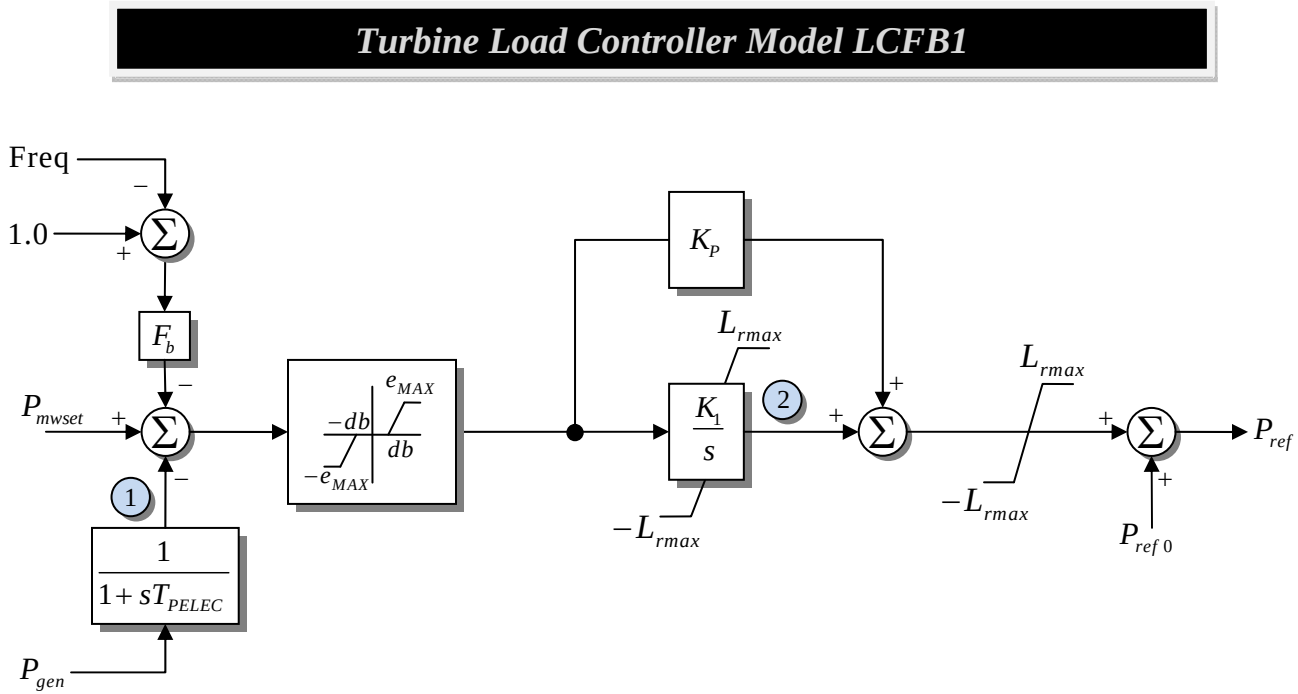

Frequency Bias Flag - fbf, set to 1 to enable or 0 to disable

Power Controller Flag - pbf, set to 1 to enable or 0 to disable

States

1 - P_{elec} Sensed

2 - K_I

Model supported by PSLF

Governor BPA GG

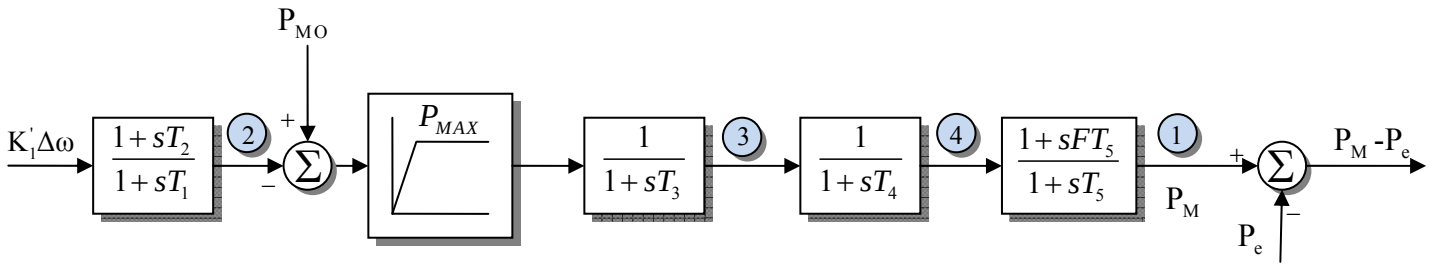

States

1 - P_{mech}

2 - Lead-Lag 1

3 - Integrator 3

4 - Integrator 4

Model in the public domain, available from BPA

Governor BPA GH

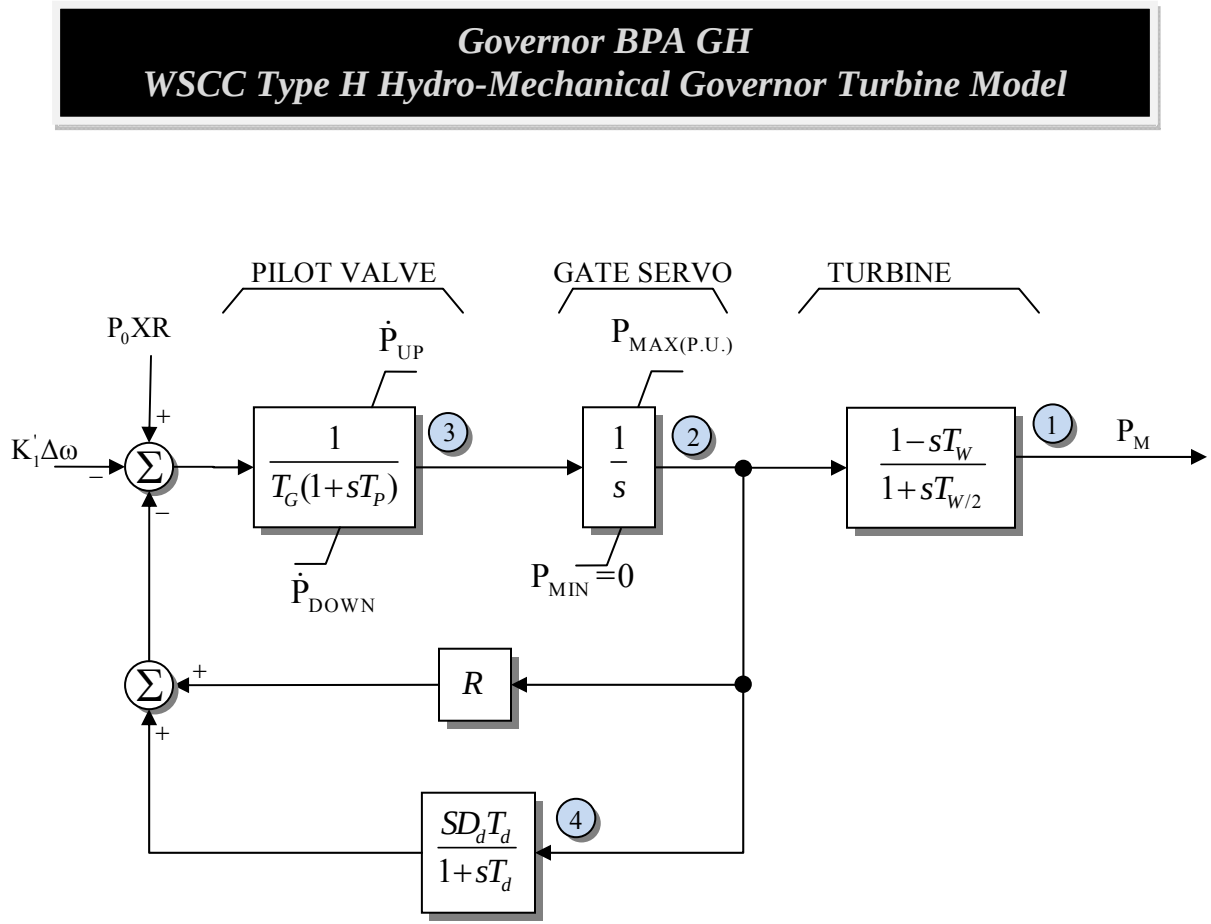

States

1 - P_{mech}

2 - P gate valve

3 - y3

4 - Feedback

Model in the public domain, available from BPA

Governor BPA GIGATB, BPA GJGATB, BPA GKGATB, and BPA GLTB

Governor BPA GIGATB, BPA GJGATB, BPA GKGATB, and BPA GLTB

No block diagrams have been created

Governor BPA GSTA

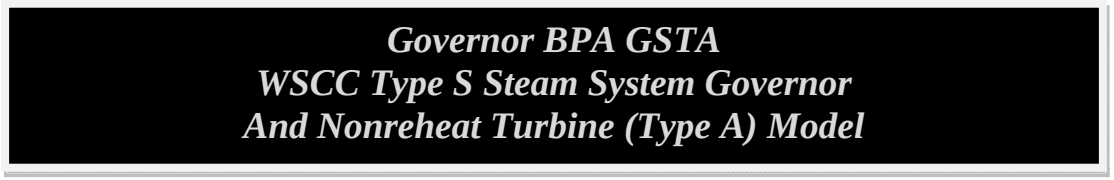

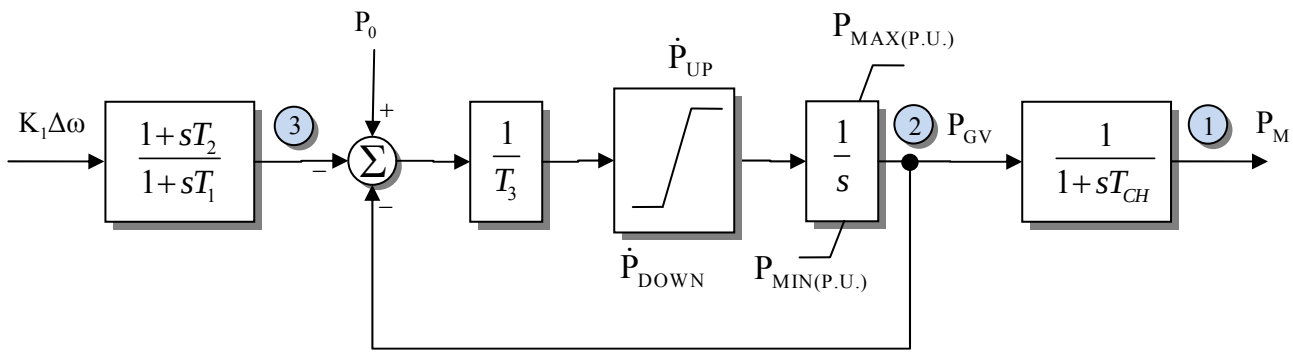

States

1 - P_{mech}

2 - P gate valve

3 - Lead-lag

Model in the public domain, available from BPA

Governor BPA GSTB

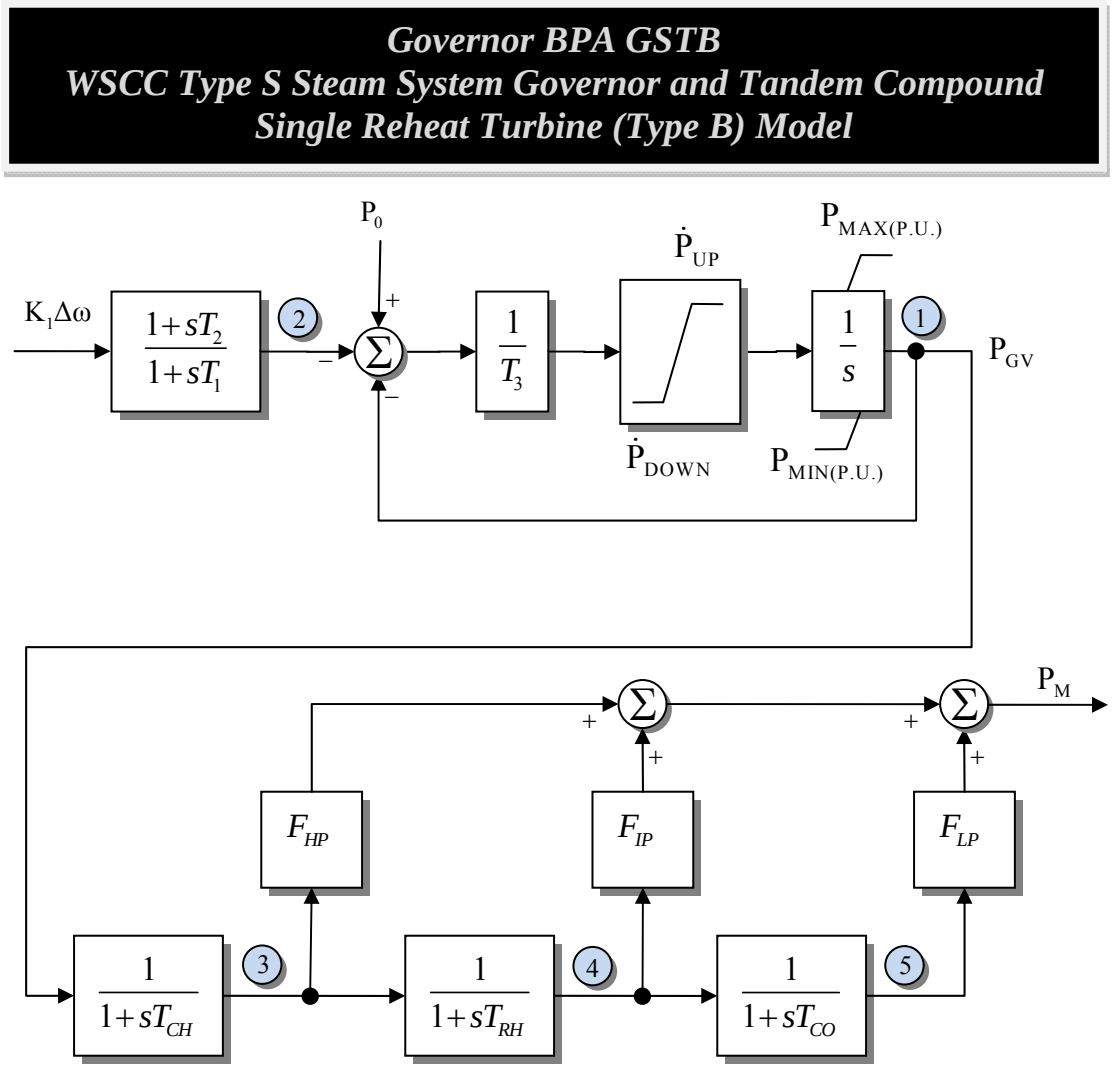

States

1 - P gate valve

2 - Lead-lag

3 - y3

4 - y4

5 - y5

Model in the public domain, available from BPA

Governor BPA GSTC

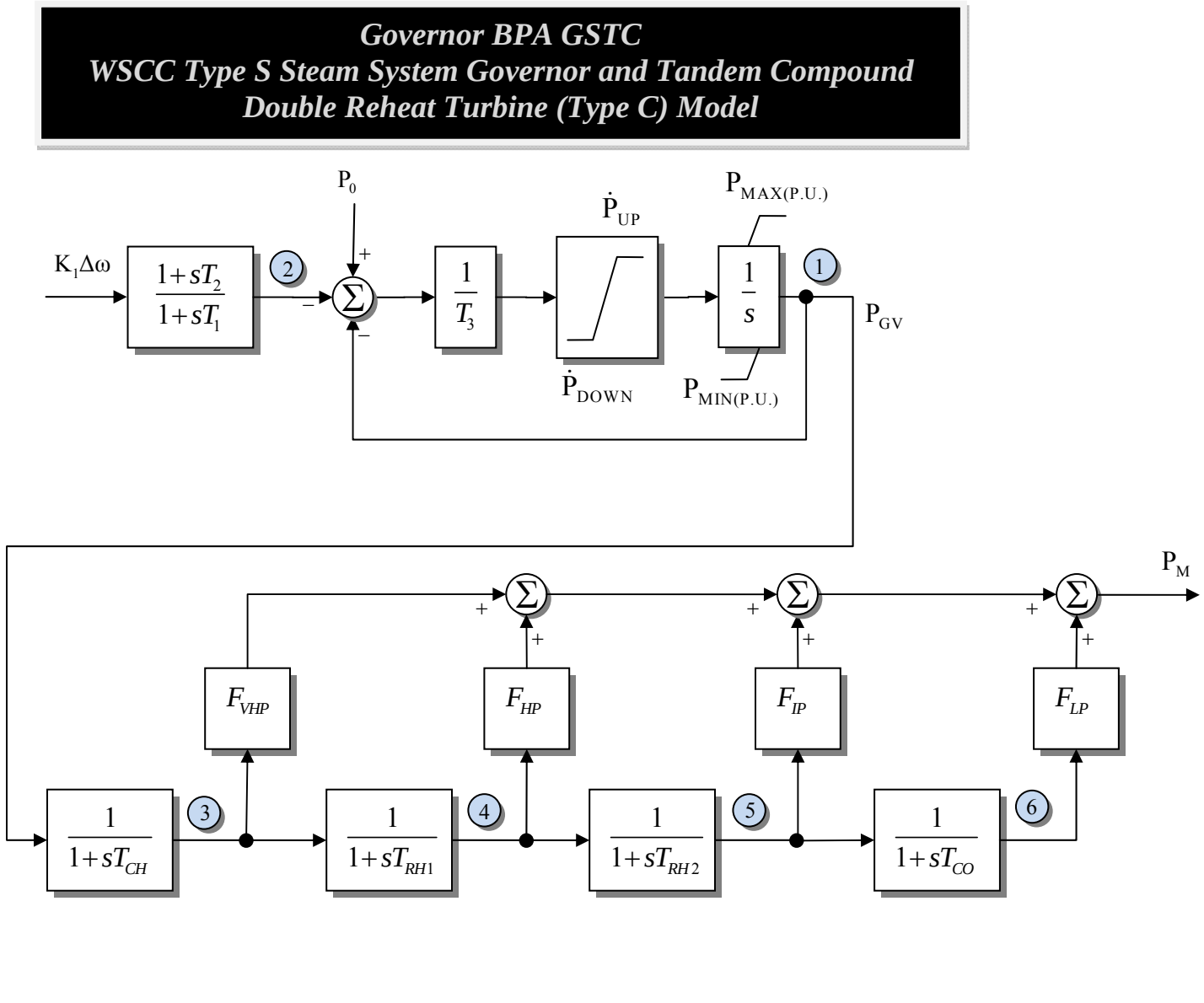

States

1 - P gate valve

2 - Lead-lag

3 - y3

4 - y4

5 - y5

6 - y6

Model in the public domain, available from BPA

Governor BPA GWTW

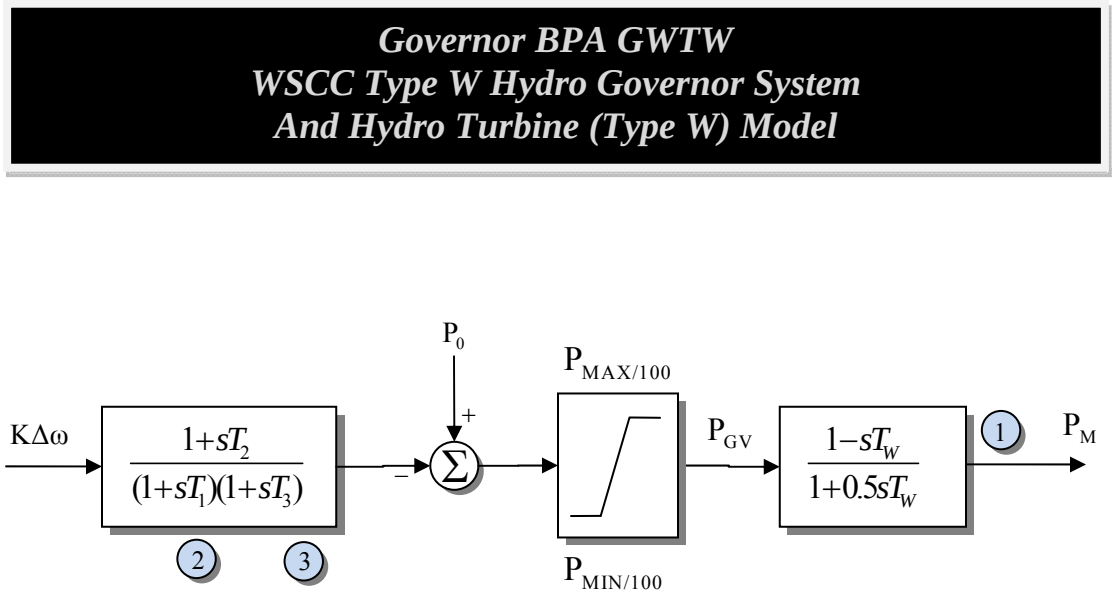

States

1 - P_{mech}

2 - y0

3 - y1

Model in the public domain, available from BPA

Governor CCBT1

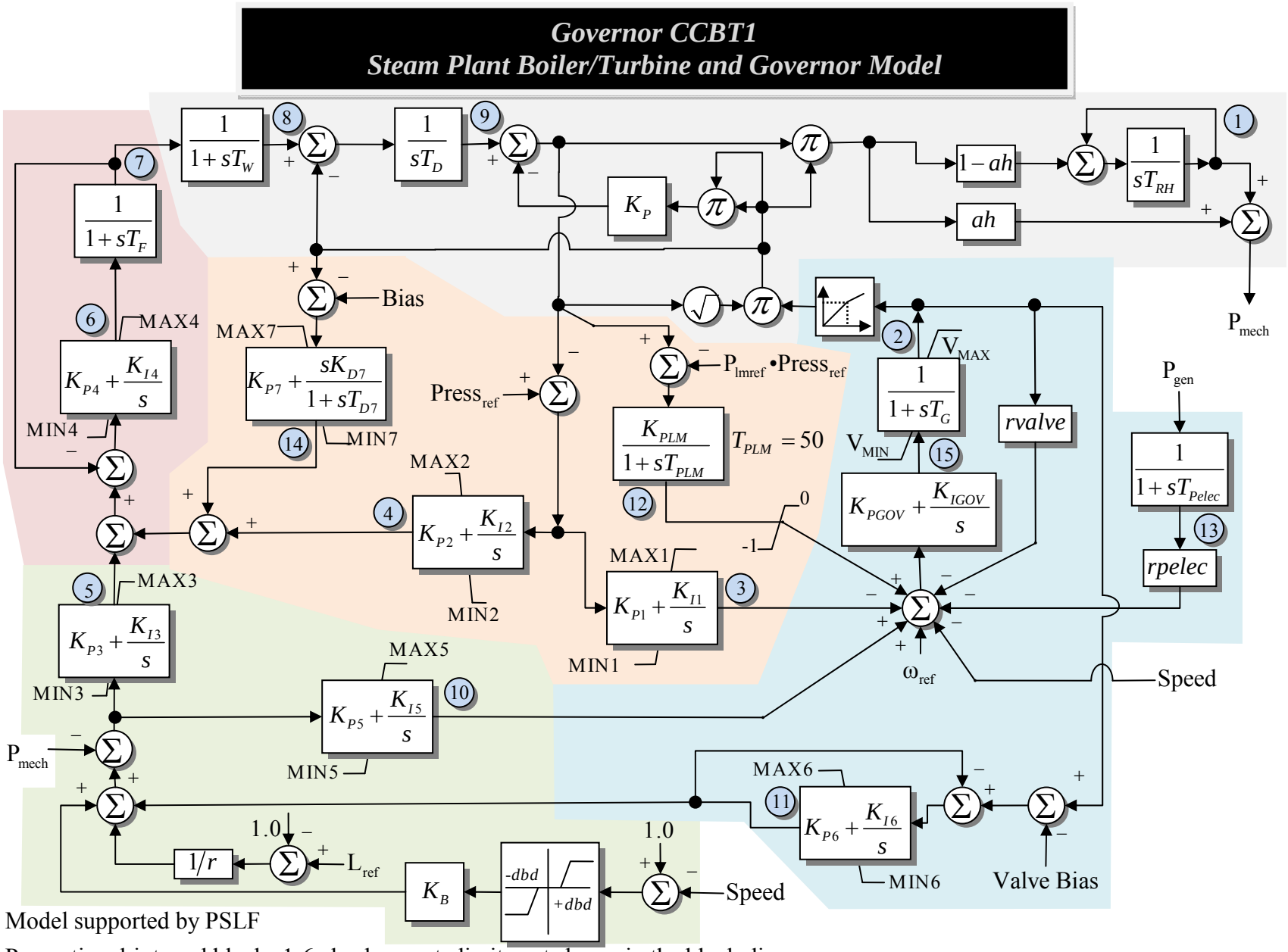

Model supported by PSLF

Proportional-integral blocks 1-6 also have rate limits not shown in the block diagram

Governor CRCMGV

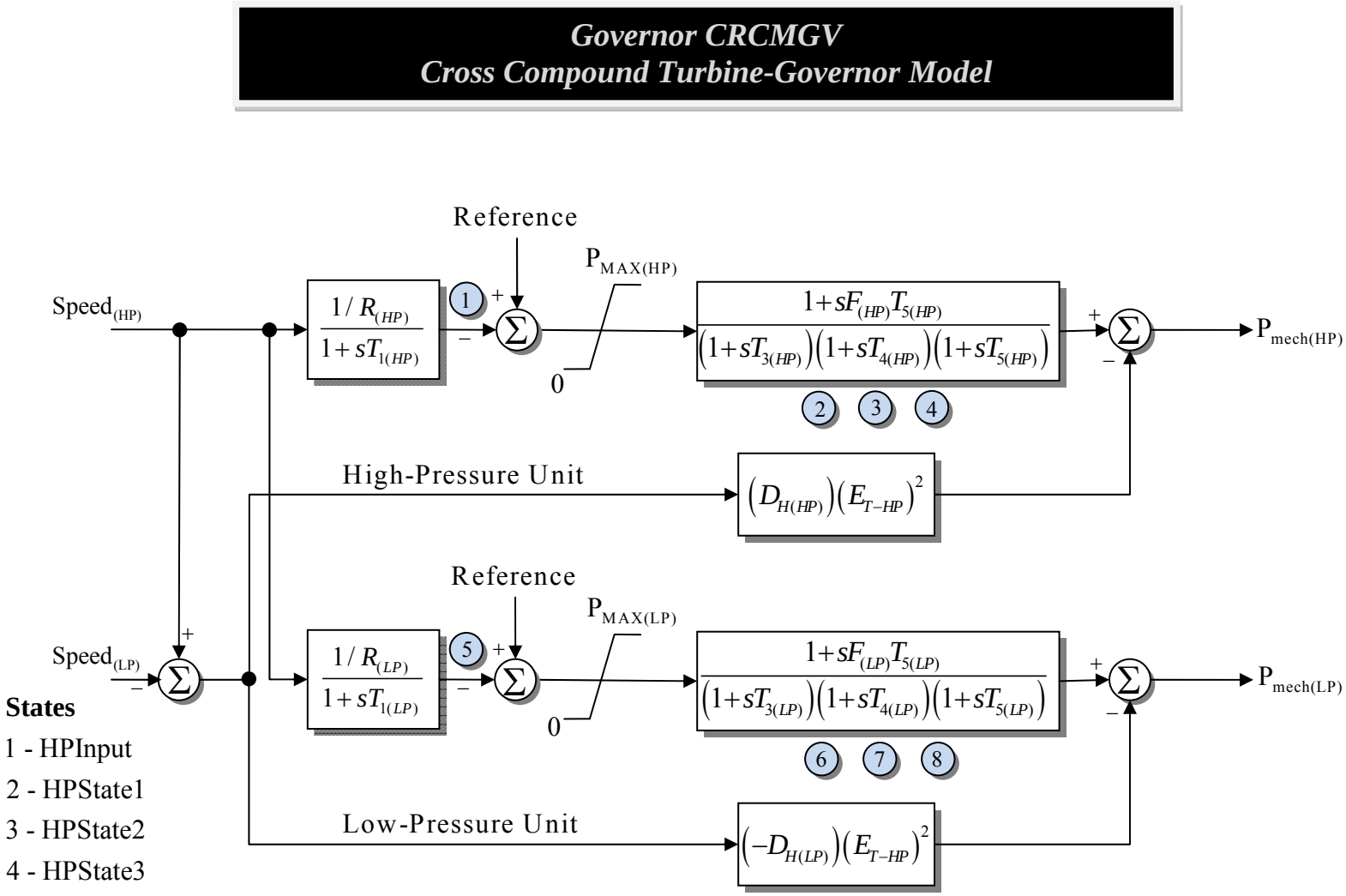

States

1 - HPInput

2 - HPState1

3 - HPState2

4 - HPState3

5 - LPInput

6 - LPState1

7 - LPState2

8 - LPState3

Model supported by PSLF and PSSE

Governor DEGOV

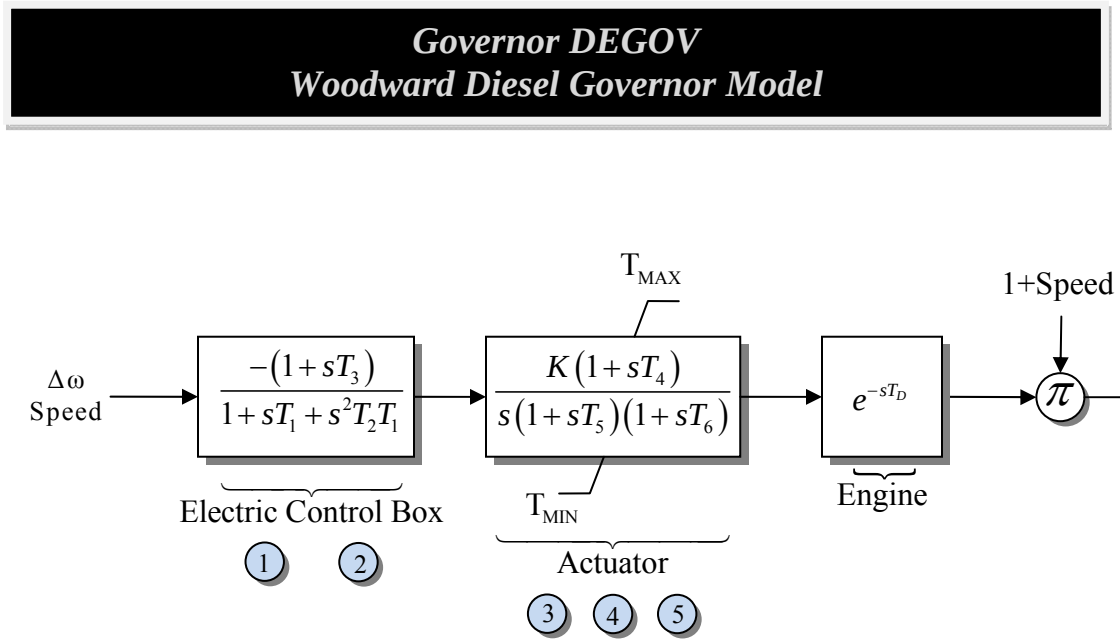

States

1 - Control box 1

2 - Control box 2

3 - Actuator 1

4 - Actuator 2

5 - Actuator 3

Model supported by PSSE

Governor DEGOV1

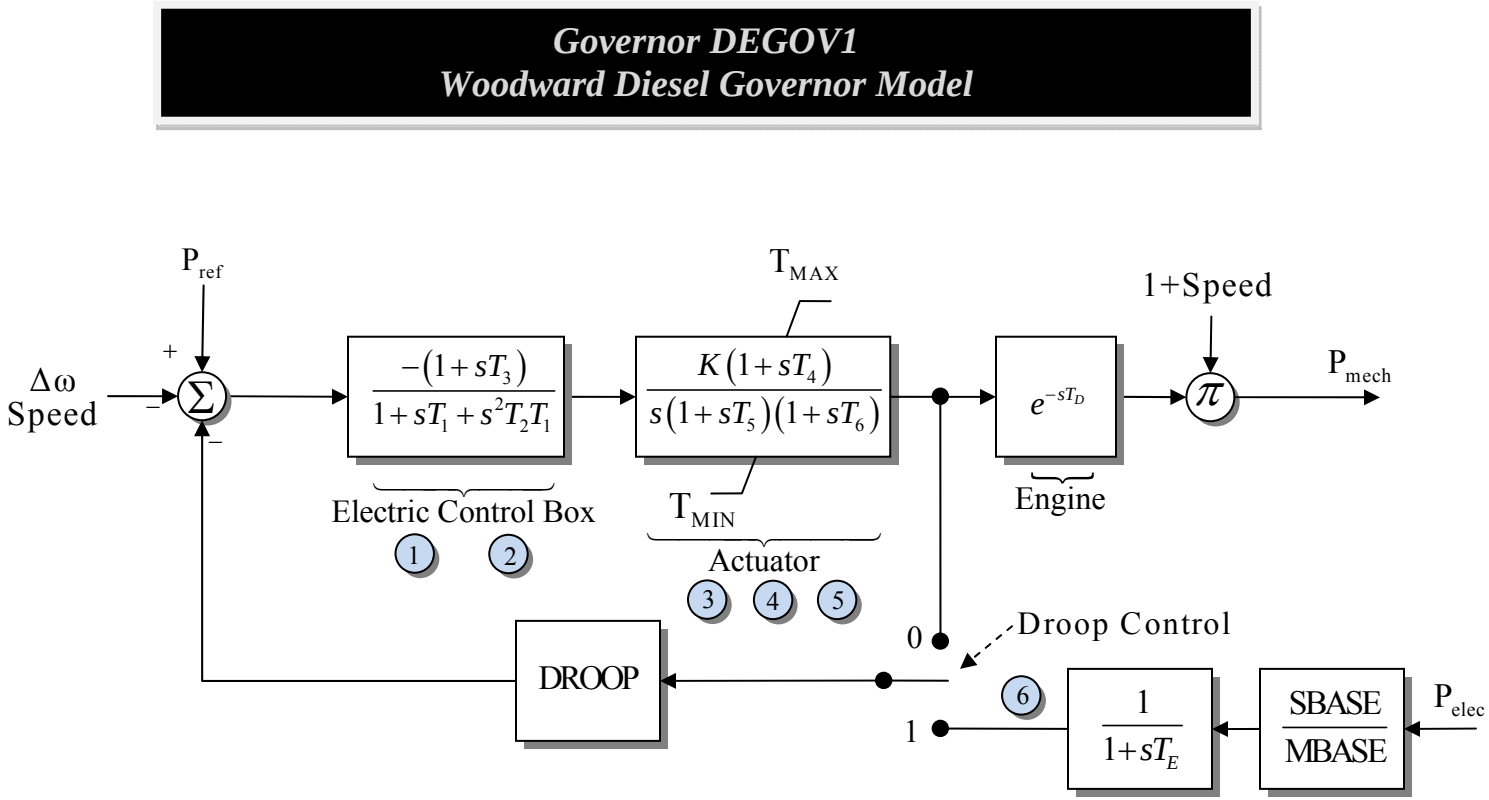

States

1 - Control box 1

2 - Control box 2

3 - Actuator 1

4 - Actuator 2

5 - Actuator 3

6 - Droop Input

Model supported by PSSE

Governor G2WSCC

Governor G2WSCC
Double Derivative Hydro Governor and Turbine
Represents WECC G2 Governor Plus Turbine Model

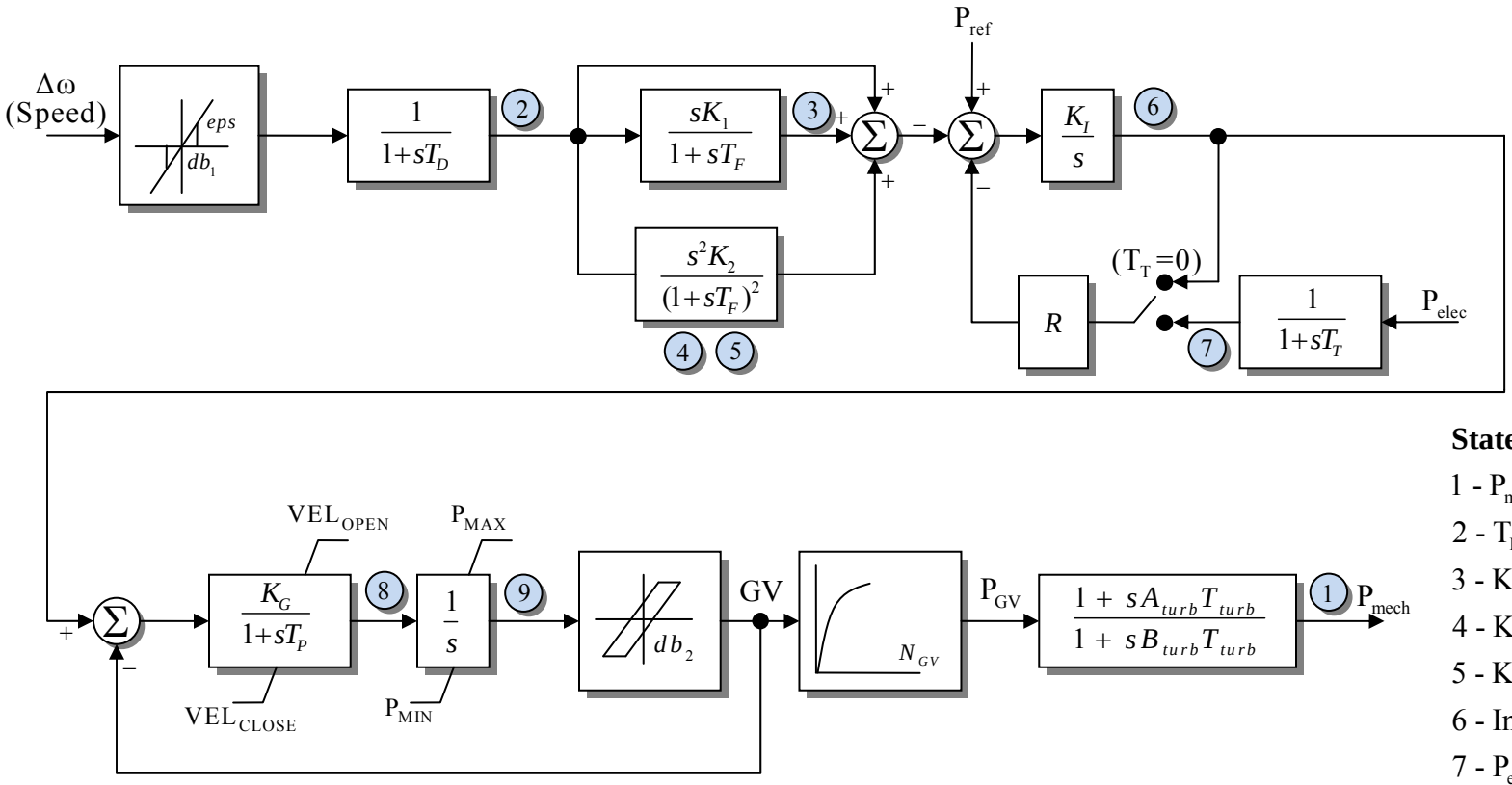

States

1 - P_{mech}
2 - T_D
3 - K_1
4 - K_2 first
5 - K_2 second
6 - Integrator
7 - P_{elec} Sensed
8 - Valve
9 - Gate

Model supported by PSLF
GV1, PGV1...GV6, PGV6 are the x,y coordinates of N_{GV} block

Governor GAST_GE

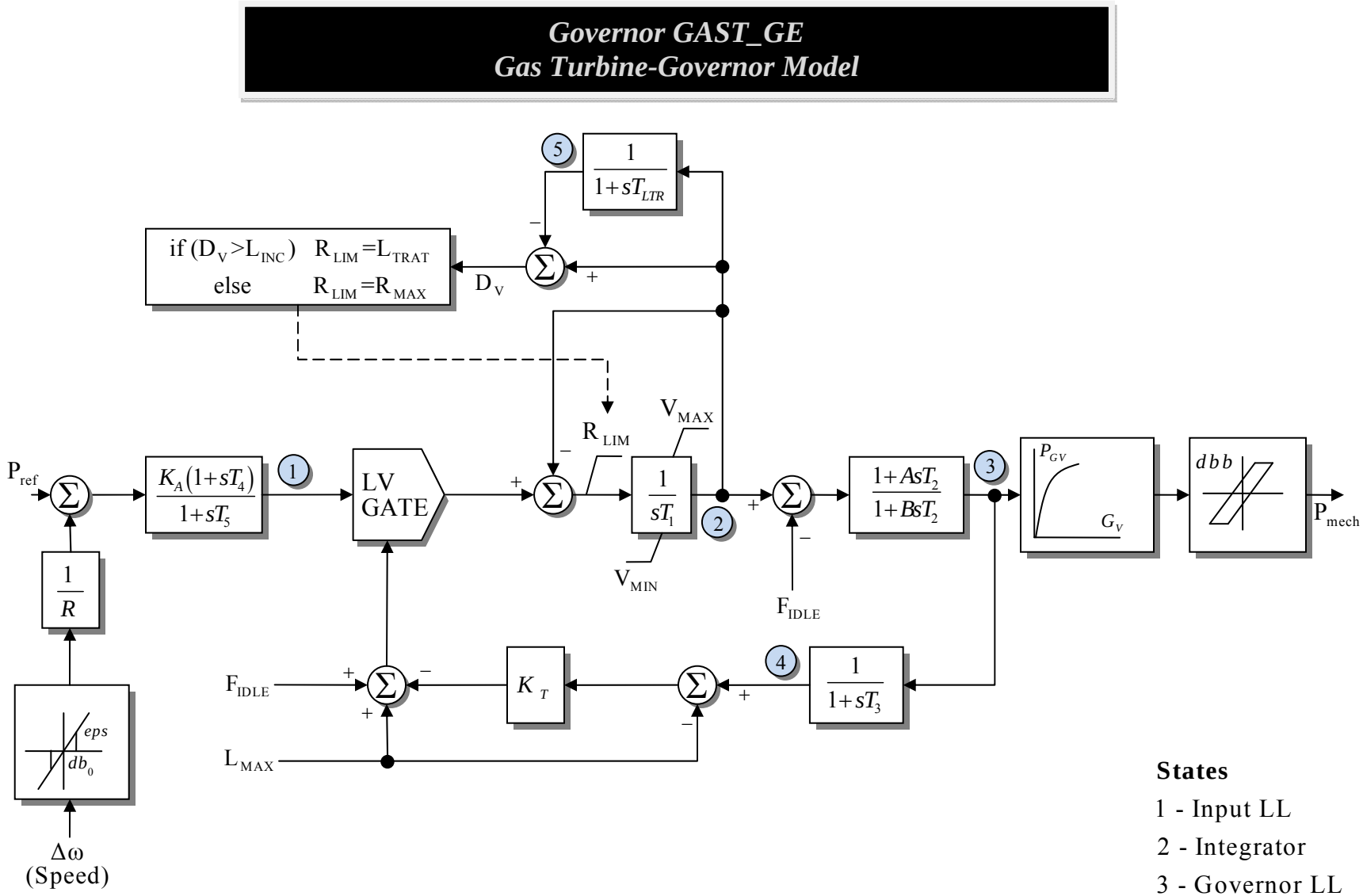

Model supported by PSLF

GV1, PGV1...GV6, PGV6 are the x,y coordinates of P_{GV} vs. GV block

States

1 - Input LL

2 - Integrator

3 - Governor LL

4 - Load Limit

5 - Temperature

Governor GAST_PTI

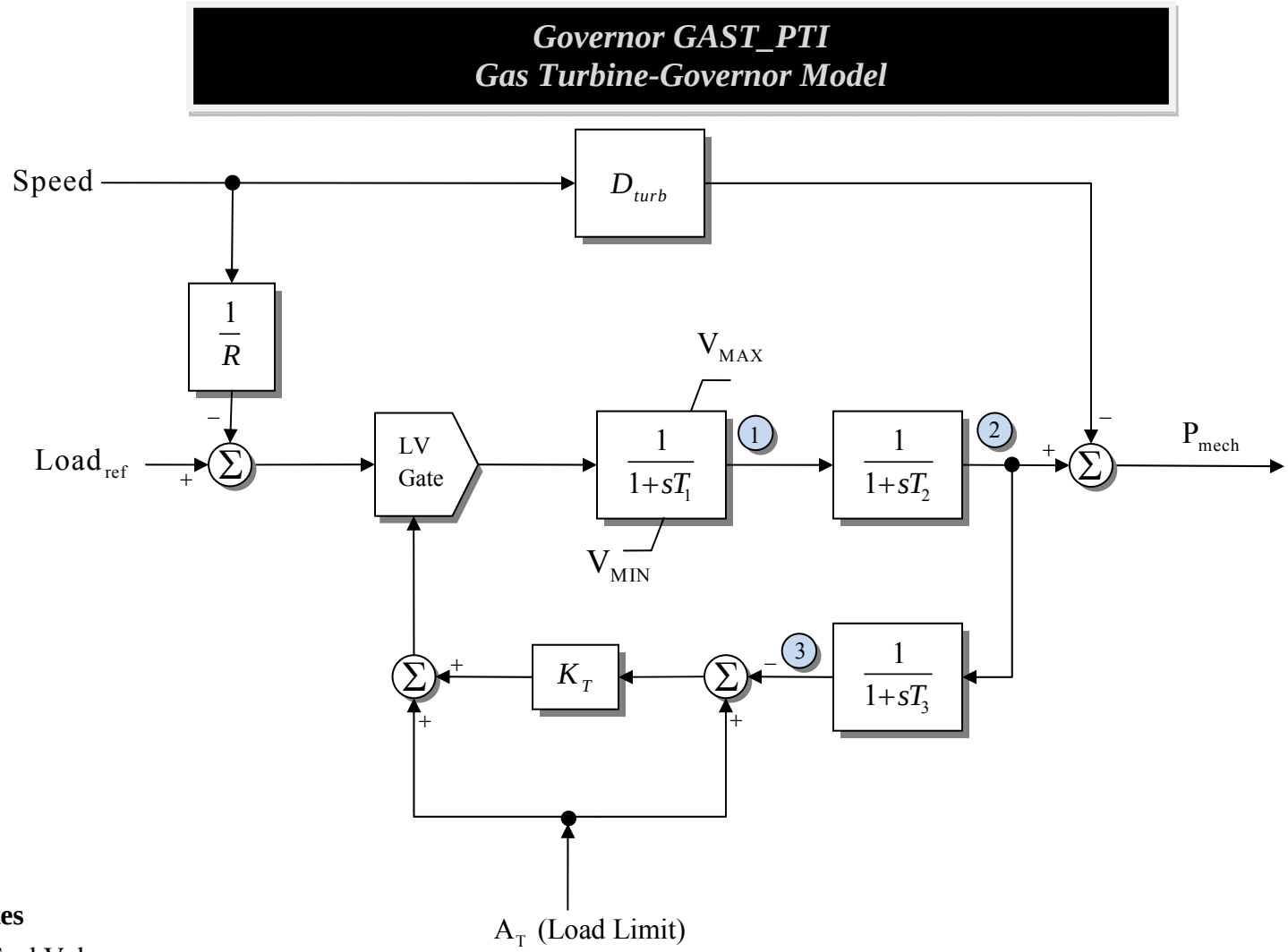

States

1 - Fuel Valve

2 - Fuel Flow

3 - Exhaust Temperature

Model supported by PSSE

Governor GAST2A

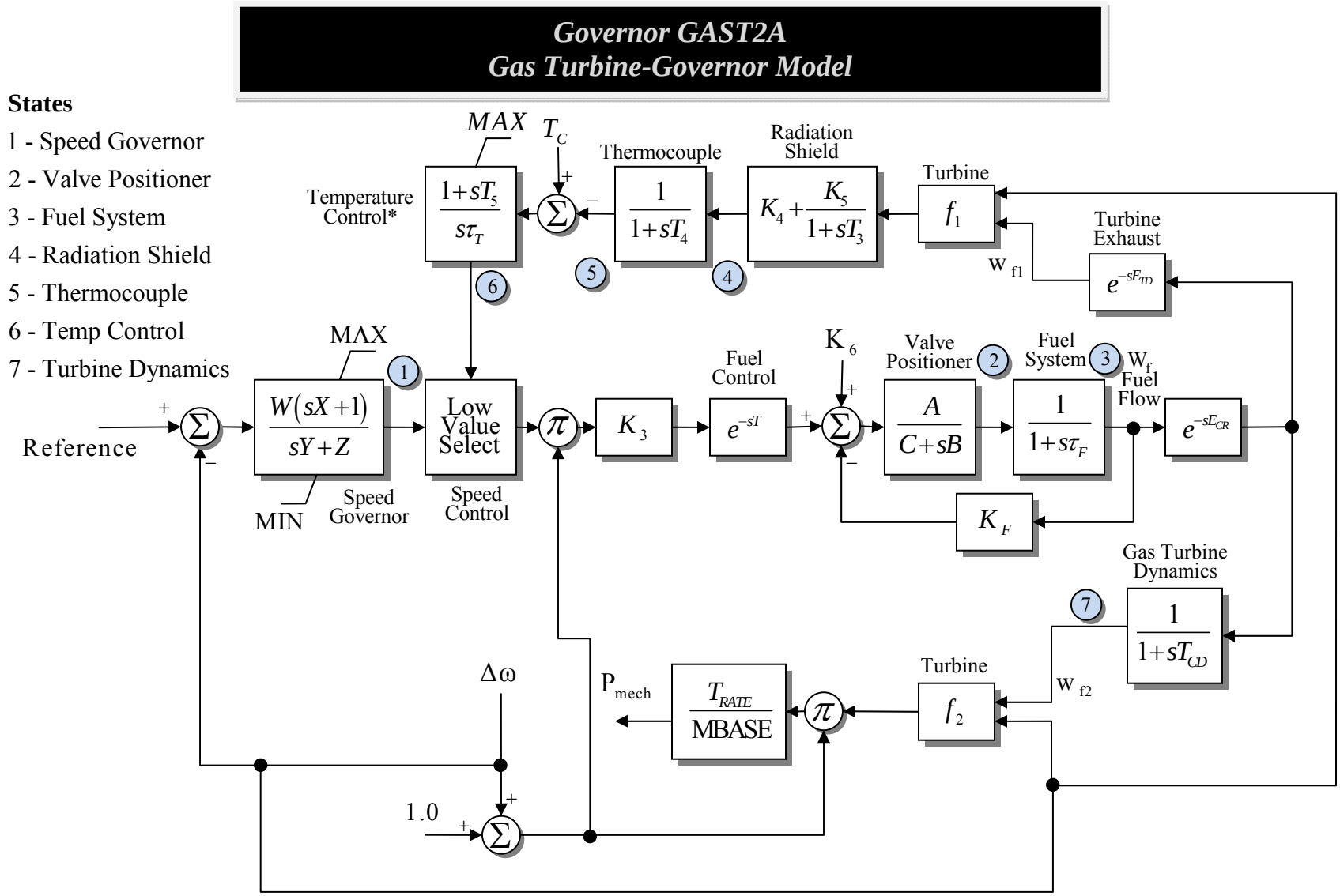

* Temperature control output is set to output of speed governor when temperature control input changes from positive to negative

Model supported by PSSE

$$f_1 = T_R - A_{f1}\left(1.0 - w_{f1}\right) - B_{f1}\left(\text{Speed}\right) \qquad f_2 = A_{f2} - B_{f2}\left(w_{f2}\right) - C_{f2}\left(\text{Speed}\right)$$

Governor GASTWD

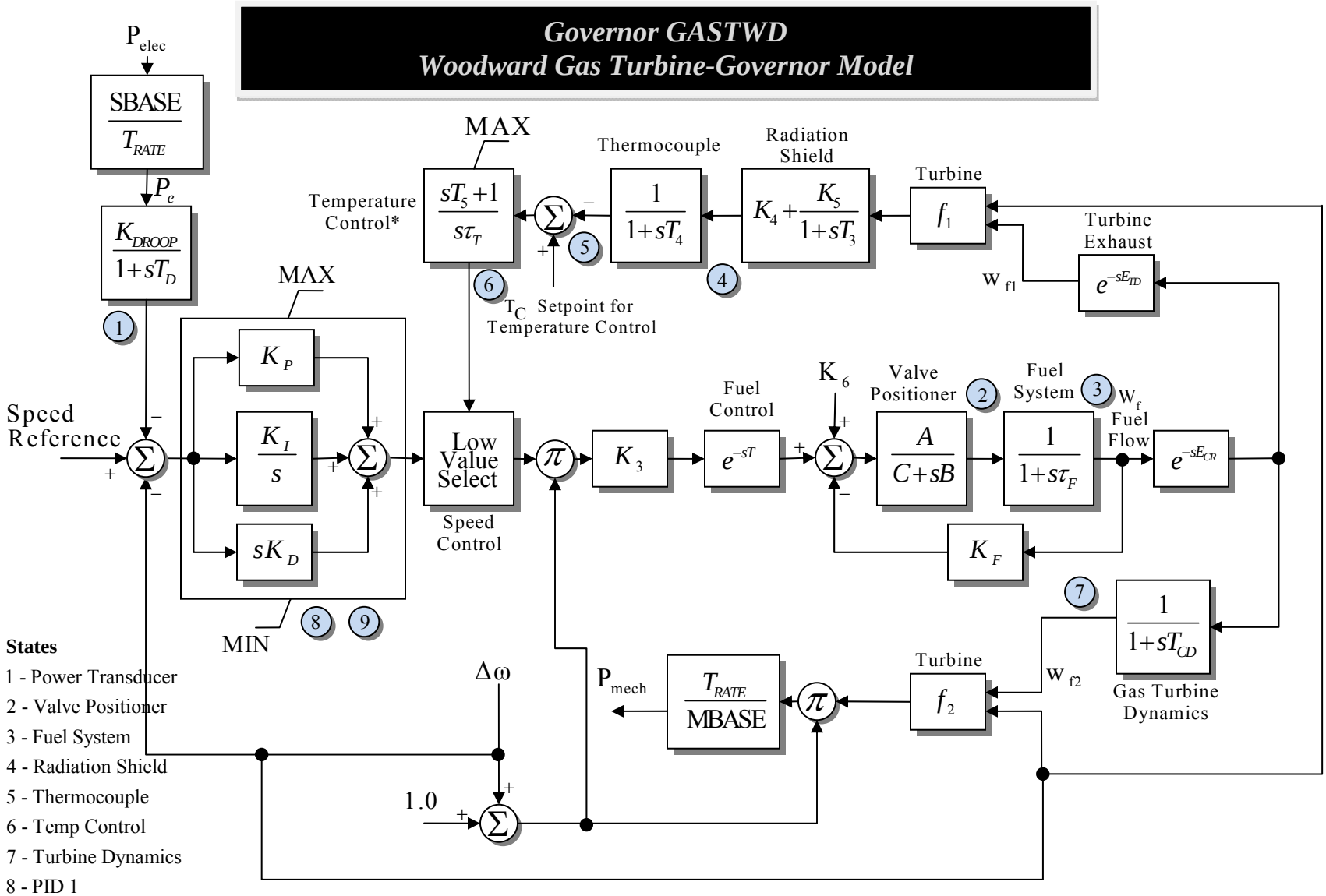

Governor GGOV1

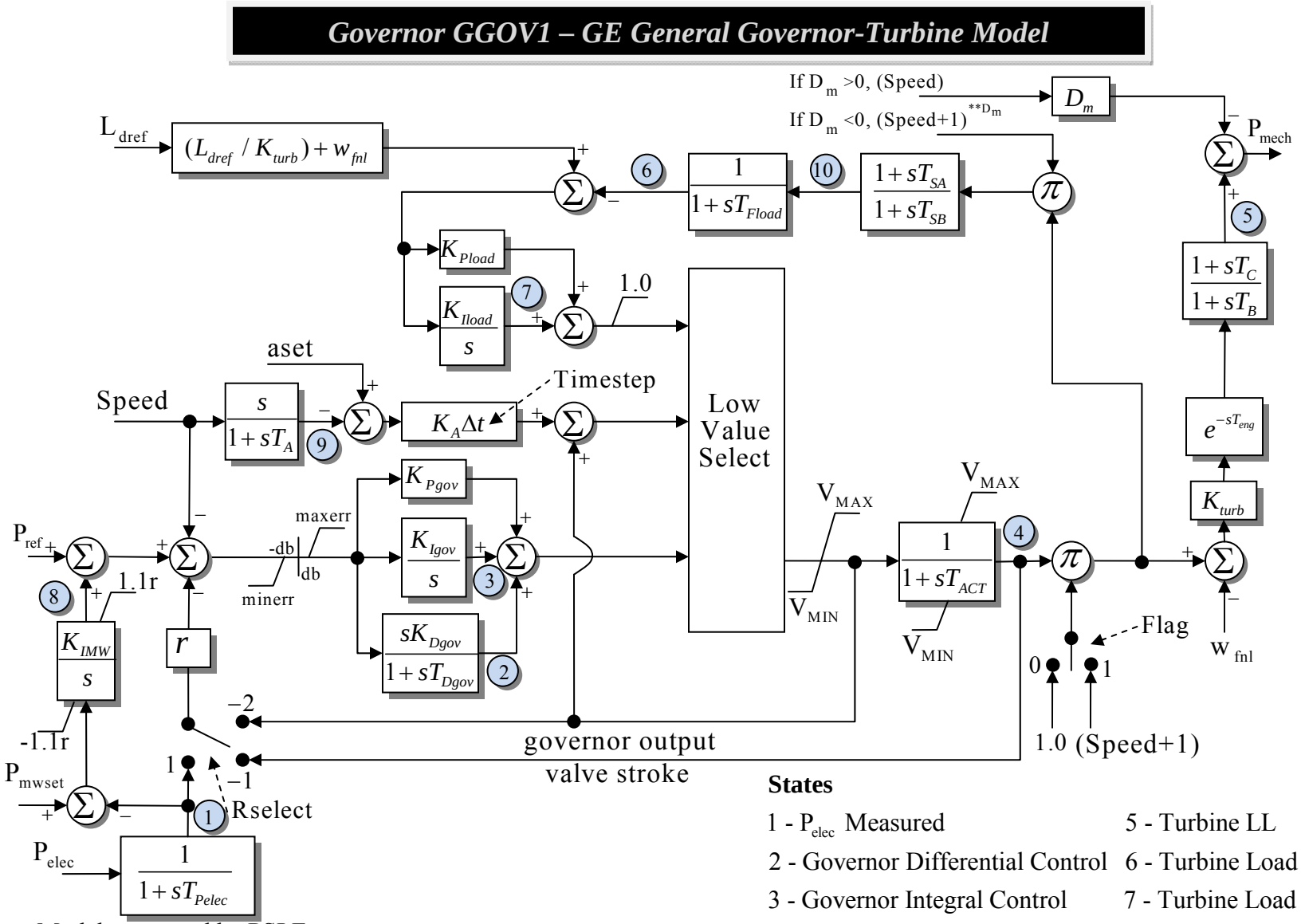

Model supported by PSLF

Model supported by PSSE does not include non-windup limits on K_{IMW} block

R_{UP}, R_{DOWN}, R_{CLOSE}, and R_{OPEN} inputs not implemented in Simulator

States

1 - P_{elec} Measured

2 - Governor Differential Control

3 - Governor Integral Control

4 - Turbine Actuator

5 - Turbine LL

6 - Turbine Load Limiter

7 - Turbine Load Integral Control

8 - Supervisory Load Control

9 - Accel Control

10 - Temp Detection LL

Governor GGOV2

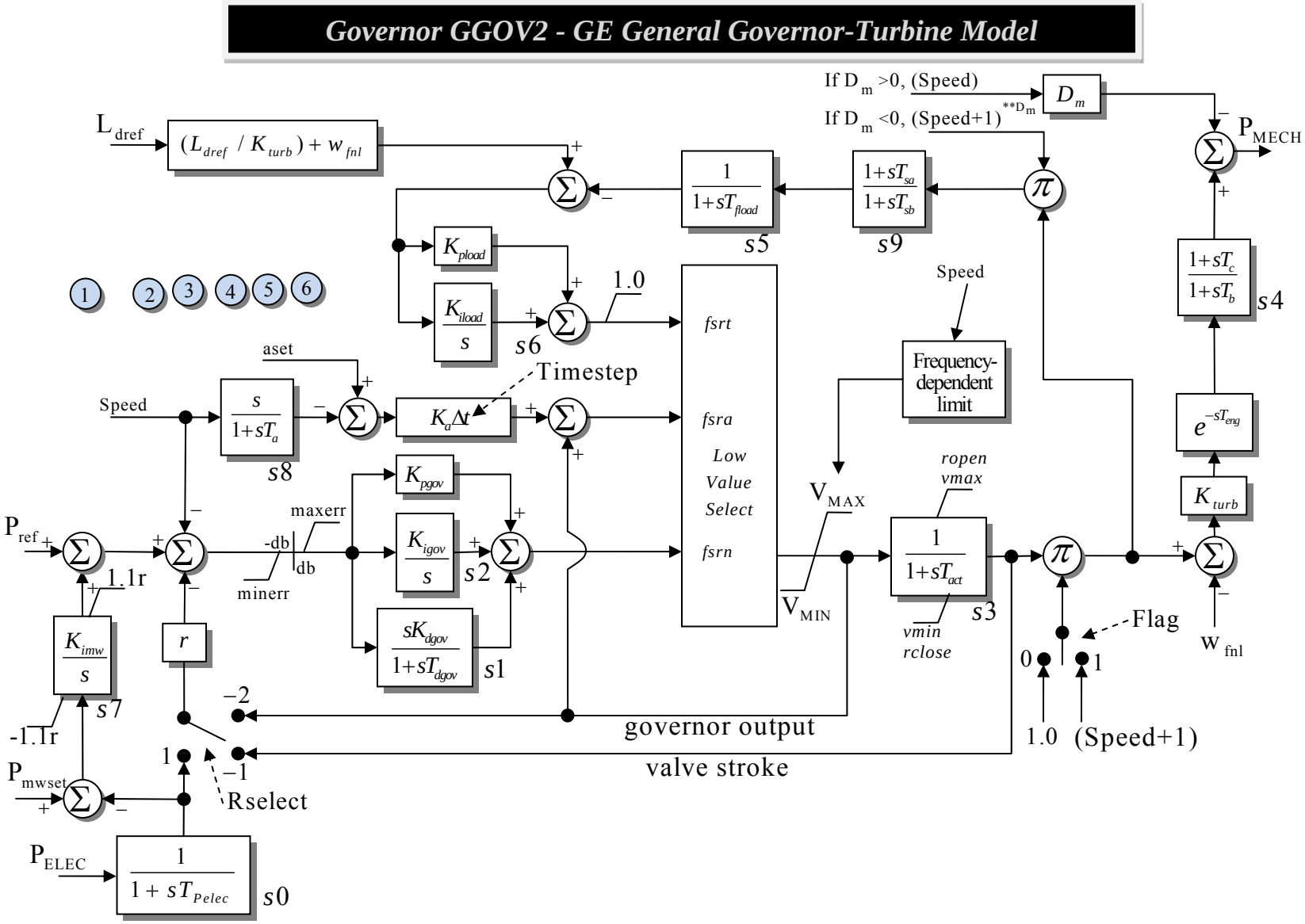

Model supported by PSLF

Governor GGOV3

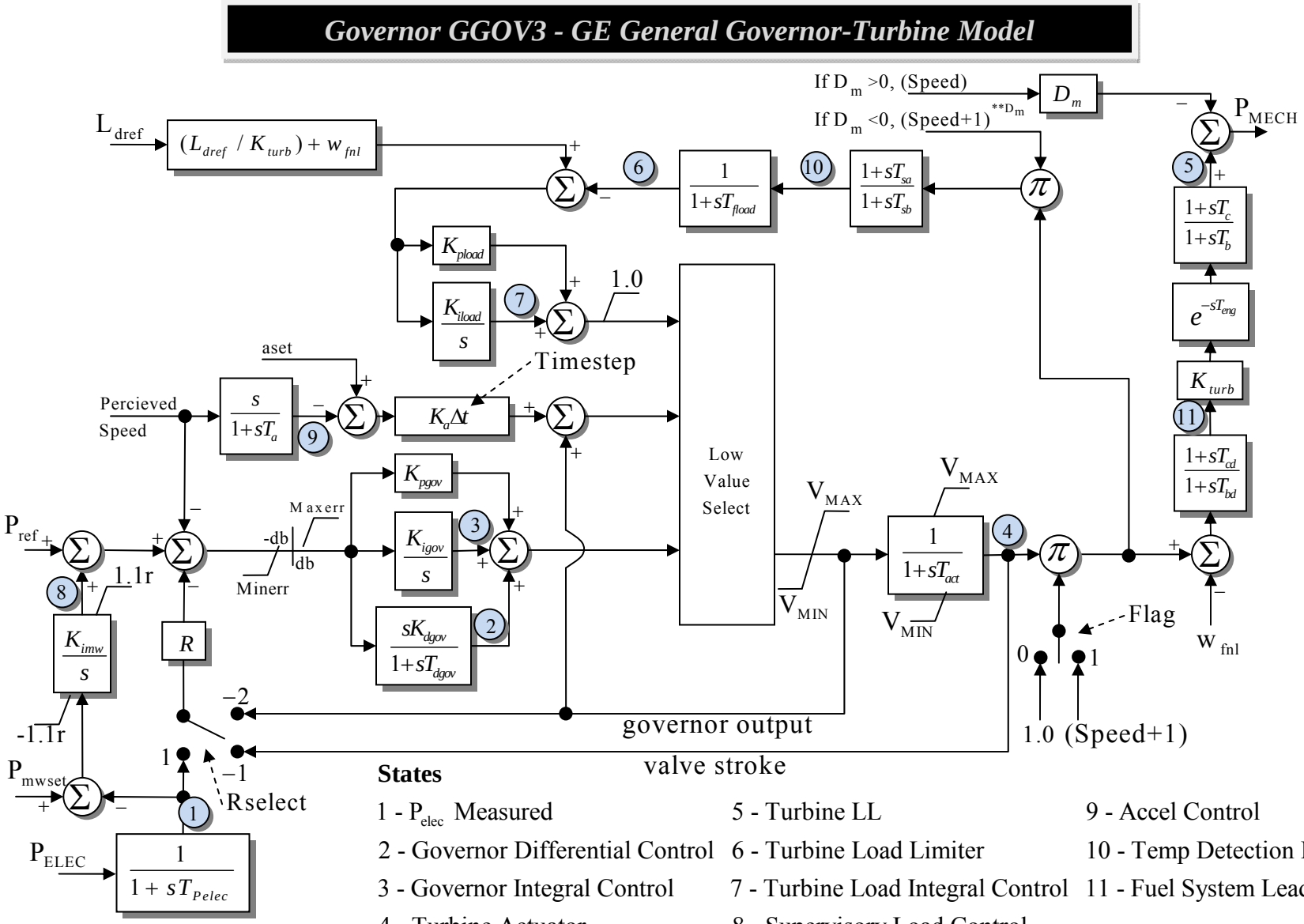

States

1 - P_{elec} Measured
2 - Governor Differential Control
3 - Governor Integral Control
4 - Turbine Actuator
5 - Turbine LL
6 - Turbine Load Limiter
7 - Turbine Load Integral Control
8 - Supervisory Load Control
9 - Accel Control
10 - Temp Detection LL
11 - Fuel System Lead Lag

Model supported by PSLF

dnrate, R_{UP}, R_{DOWN}, R_{CLOSE}, and R_{OPEN} inputs not implemented in Simulator

Governor GGOV3 - GE General Governor-Turbine Model

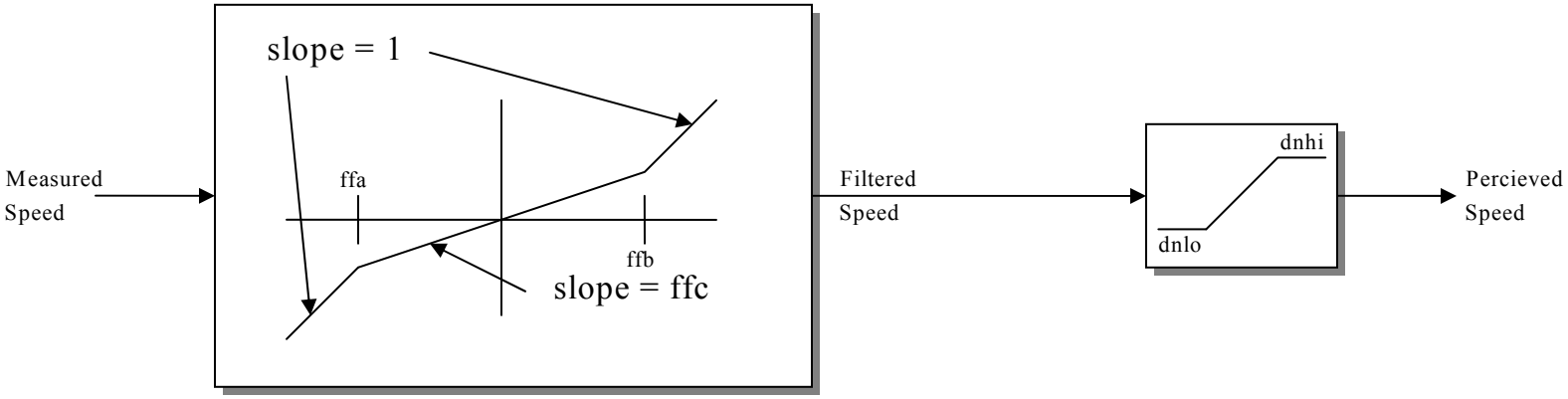

Nonlinear Speed Filter

Model supported by PSLF
Rate limit dnrate not used in Simulator

Governor GPWSCC

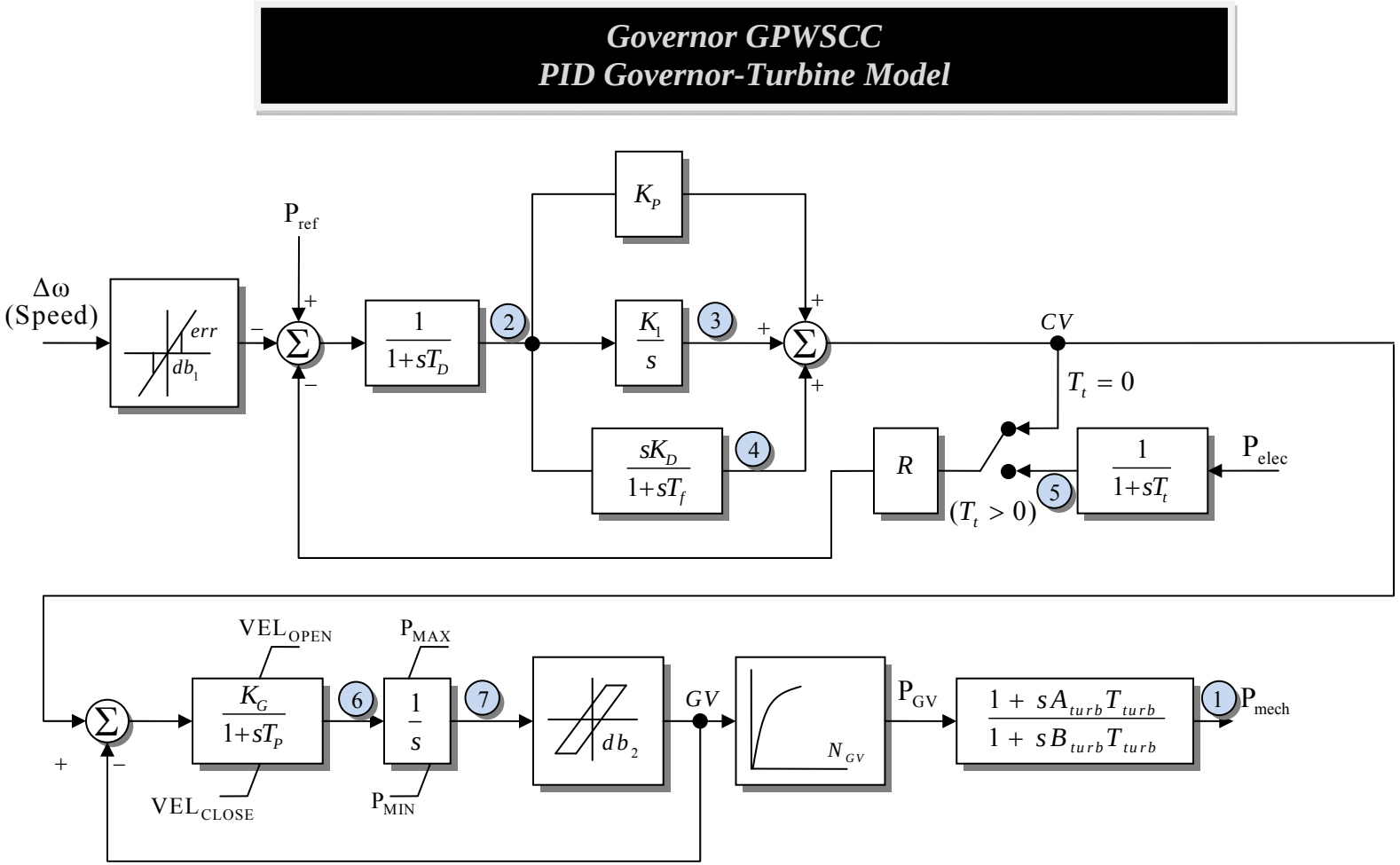

States

1 - P_{mech}	5 - P_{elec} Sensed
2 - T_D	6 - Valve
3 - Integrator	7 - Gate
4 - Derivative	

Model supported by PSLF

GV1, PGV1...GV6, PGV6 are the x,y coordinates of N_{GV} block

Governor HYG3

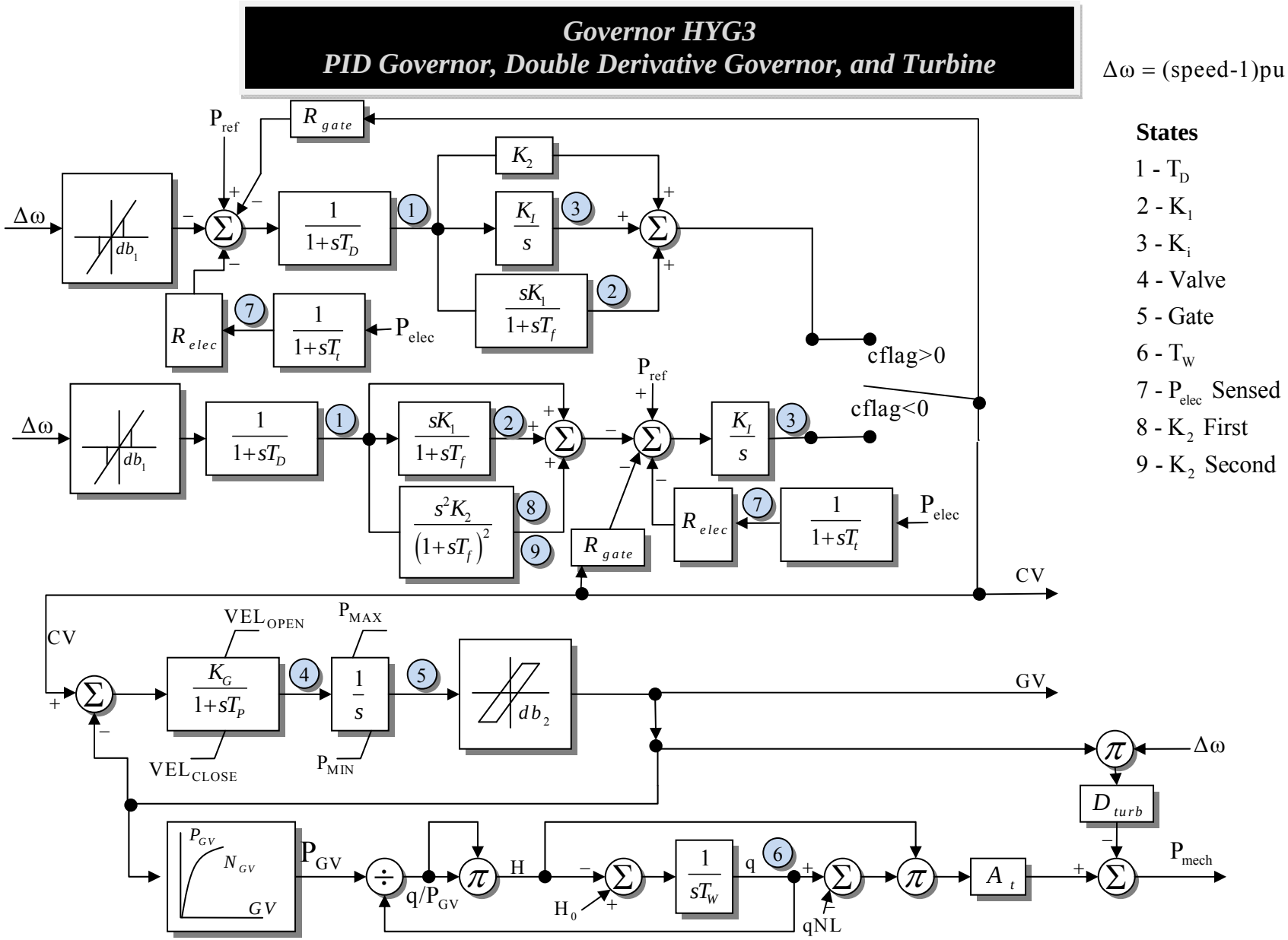

Model supported by PSLF

Note: cflag determines numbering of states

GV1, PGV1...GV6, PGV6 are the x,y coordinates of N_{GV} block

Governor HYGOV

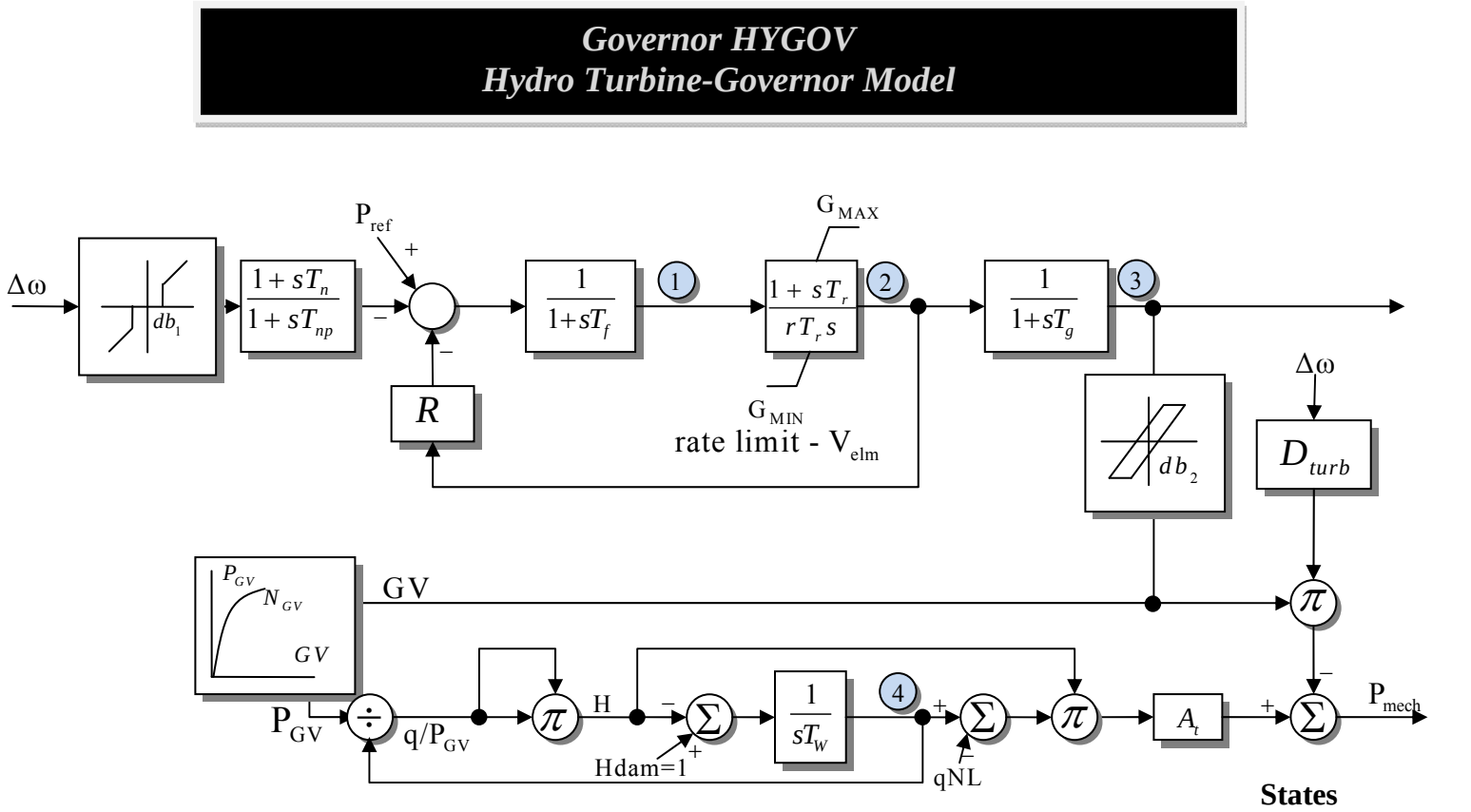

States

1 - Filter Output

2 - Desired Gate

3 - Gate

4 - Turbine Flow

Model supported by PSSE and PSLF

Rperm shown as R, Rtemp shown as r

GV0, PGV0...GV5, PGV5 are the x,y coordinates of N_{GV} block

Ttur, Tn, Tnp, db1, Eps, db2, Bgv0...Bgv5, Bmax, Tblade not implemented in Simulator

Governor HYGOV2

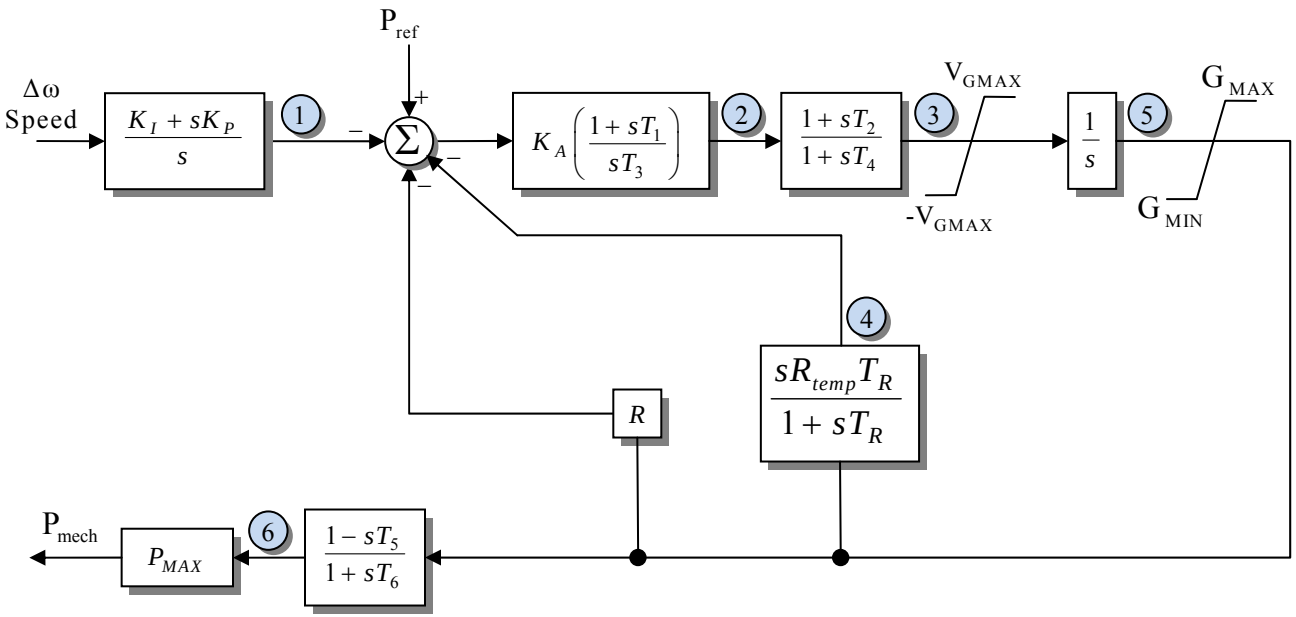

States

1 - Filter Output

2 - Governor

3 - Governor Speed

4 - Droop

5 - Gate

6 - Penstock

The G_{MAX} G_{MIN} limit is modeled as non-windup in PSSE but as a windup limit in Simulator.

Model supported by PSSE

Governor HYGOV4

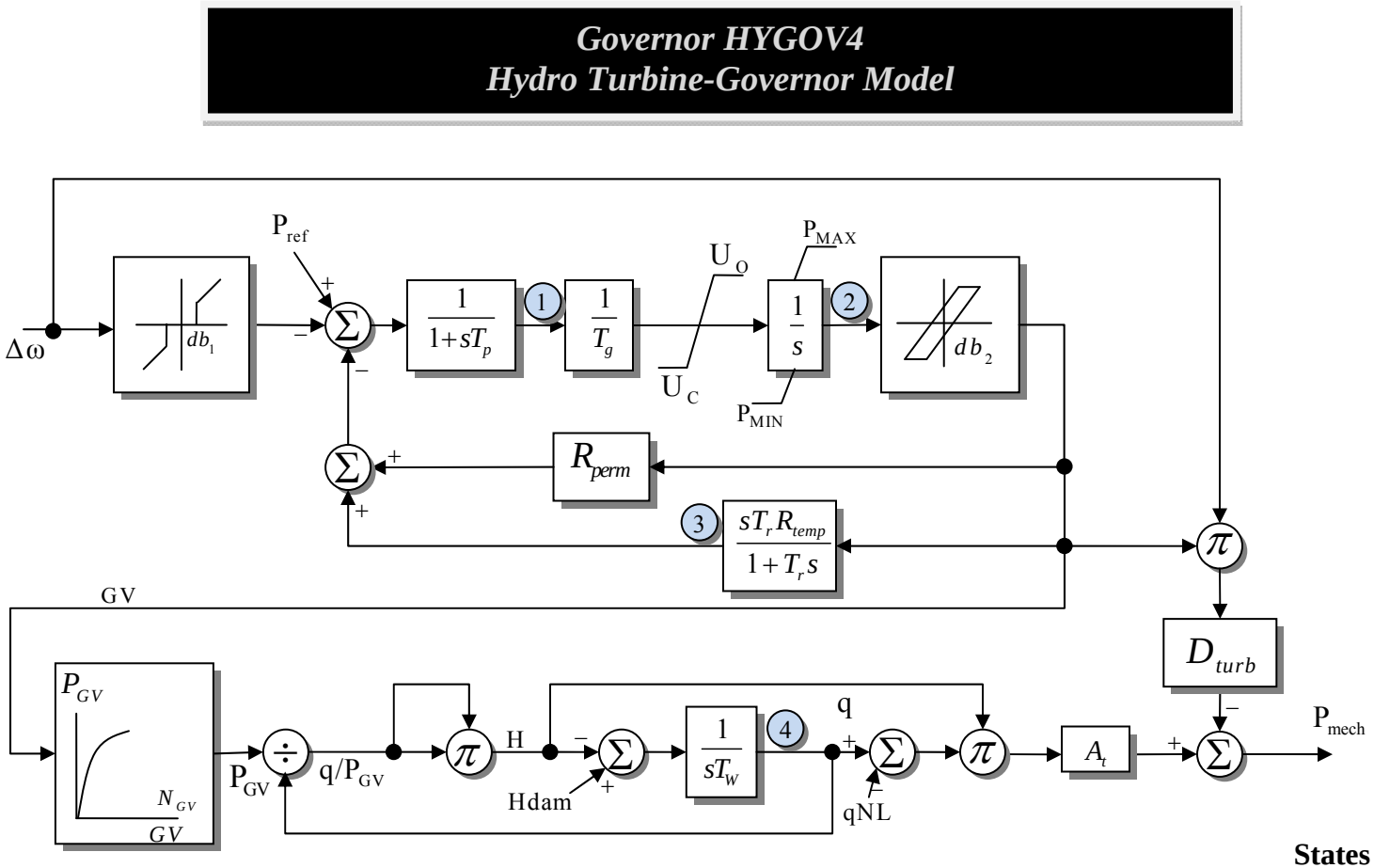

States

1 - Velocity

2 - Gate

3 - Rtemp

4 - T_W

Bgv0...Bgv5, Bmax, Tblade not implemented in Simulator

GV0, PGV0...GV5, PGV5 are the x,y coordinates of N_{GV} block

Model supported by PSLF

Governor HYST1

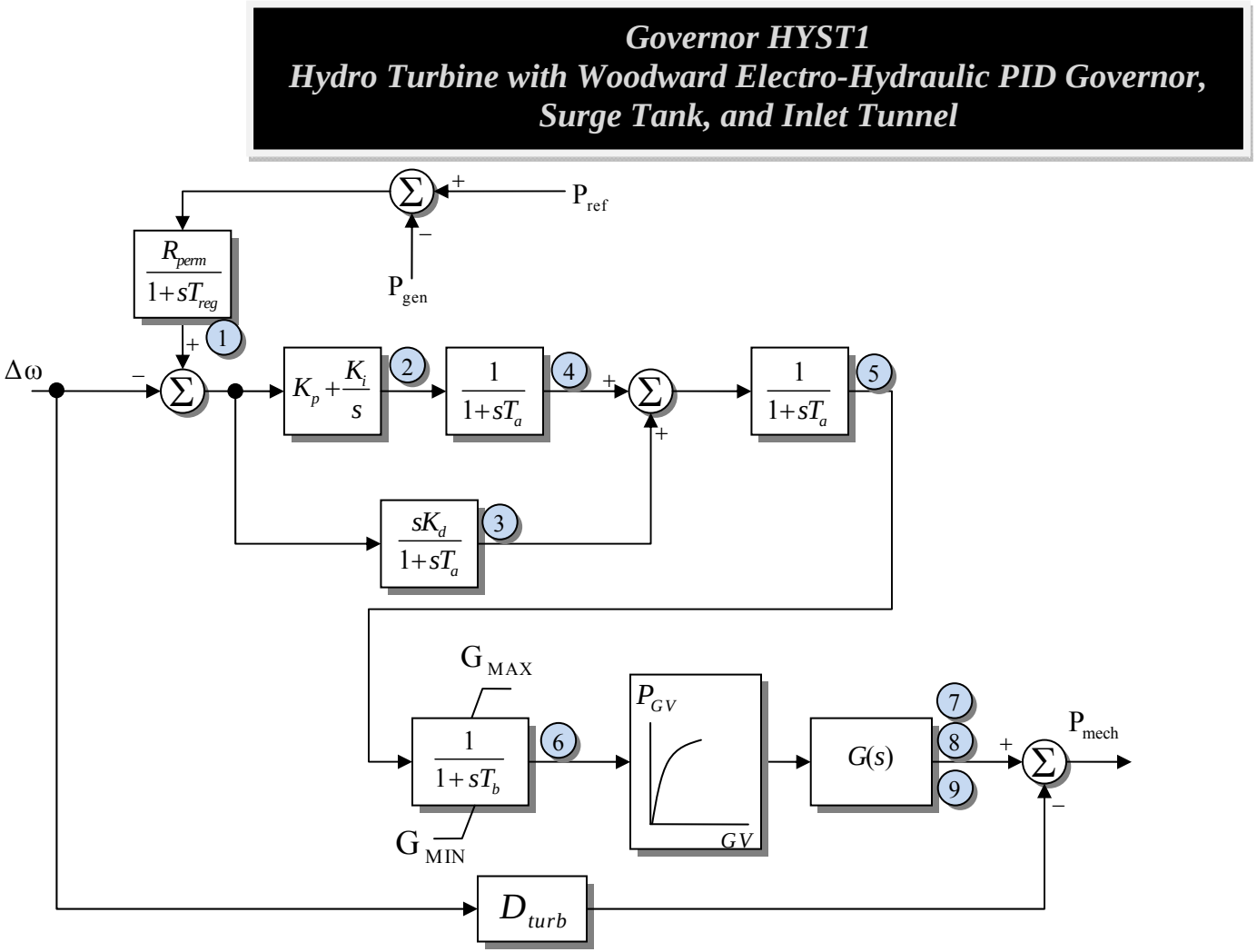

Not yet implemented in Simulator
Model supported by PSLF

Governor IEEEG1

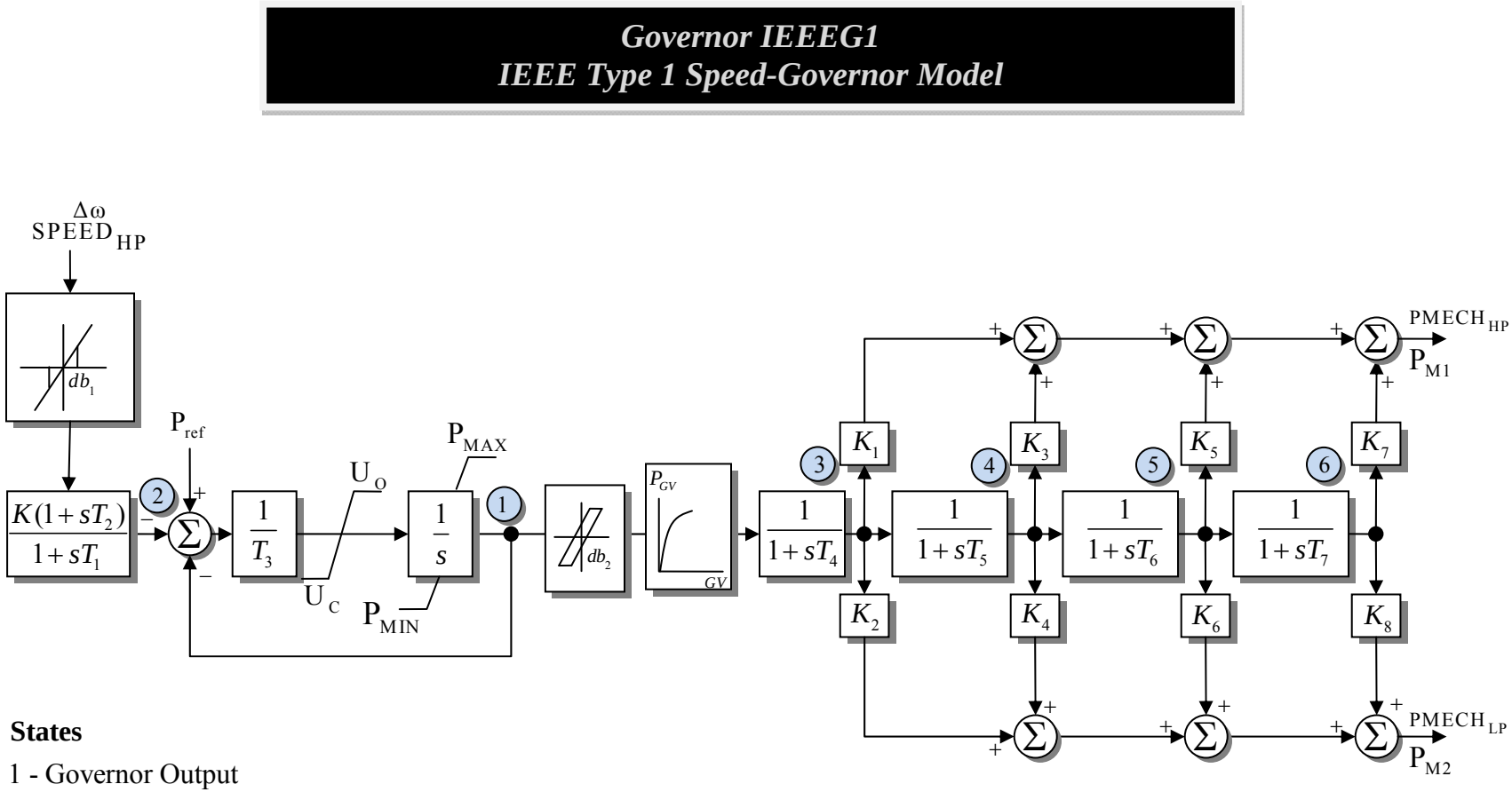

States

1 - Governor Output

2 - Lead-Lag

3 - Turbine Bowl

4 - Reheater

5 - Crossover

6 - Double Reheat

Model supported by PSLF includes hysteresis that is read but not implemented in Simulator

Model supported by PSSE does not include hysteresis and nonlinear gain

GV1, PGV1...GV6, PGV6 are the x,y coordinates of P_{GV} vs. *GV* block

Governor IEEEG2

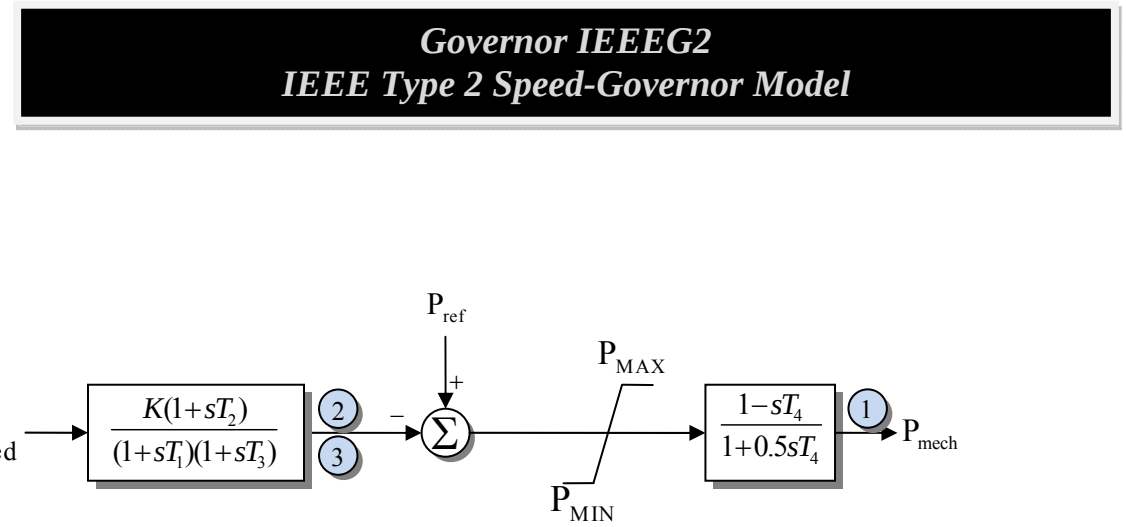

States

1 - P_{mech}

2 - First Integrator

3 - Second Integrator

Model supported by PSSE

Governor IEEEG3_GE

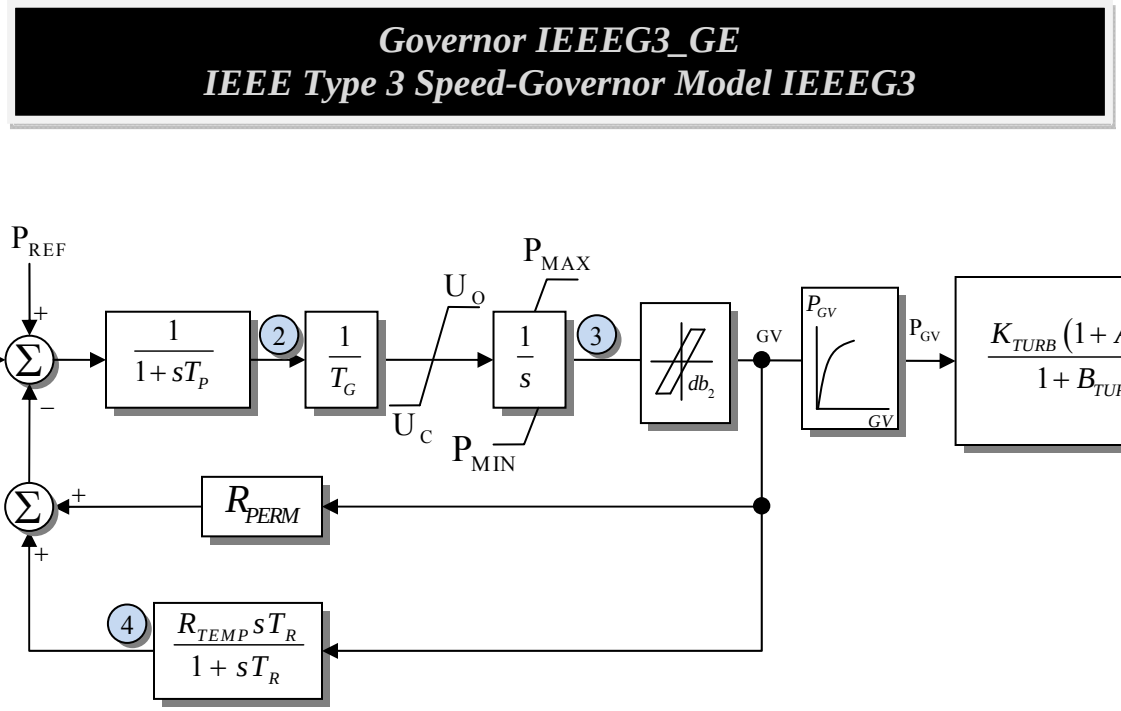

States

1 - P_{mech}

2 - Servomotor position

3 - Gate position

4 - Transient droop

PSLF model includes db1, db2, and Eps read but not implemented in Simulator

Model supported by PSLF

Governor IEEEG3_PTI

Governor_IEEEG3_PTI
IEEE Type 3 Speed-Governor Model IEEEG3

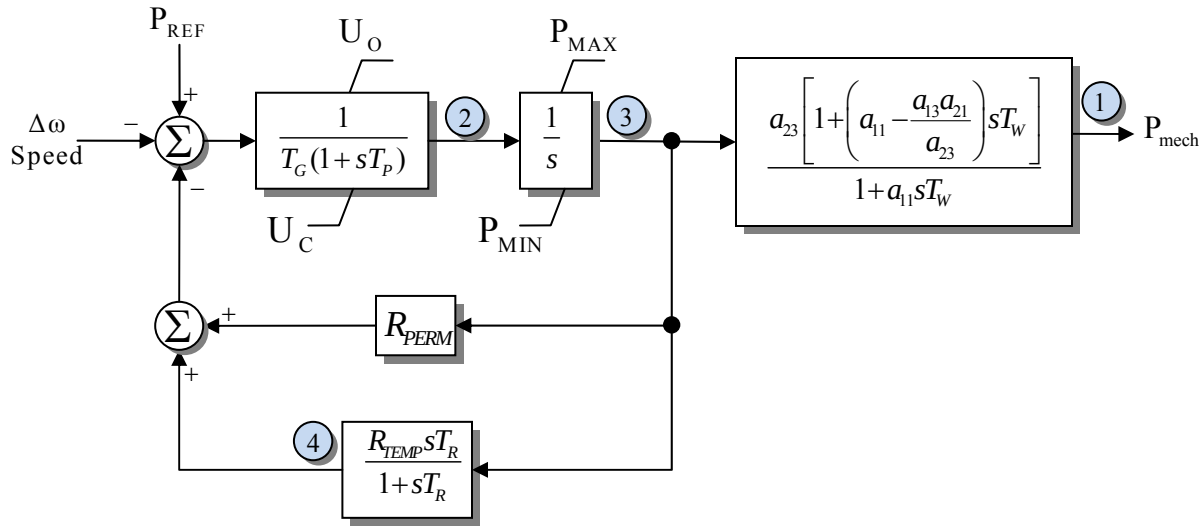

States

1 - P_{mech}

2 - Servomotor position

3 - Gate position

4 - Transient droop

Model supported by PSSE

Governor IEESGO

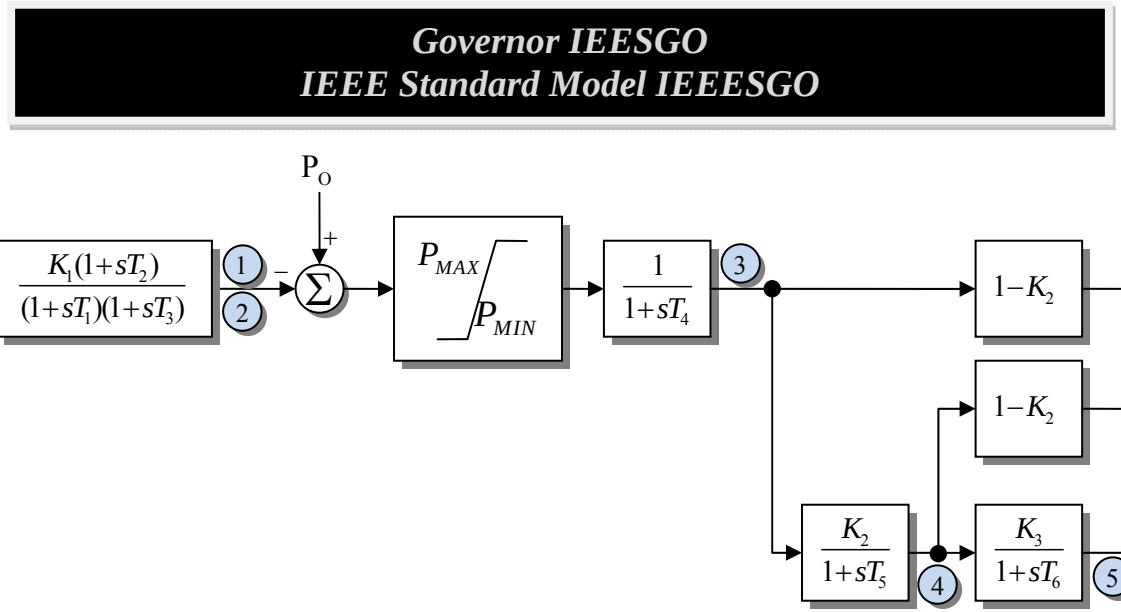

States

1 - First Integrator

2 - Second Integrator

3 - Turbine T4

4 - Turbine T5

5 - Turbine T6

Model supported by PSSE

Governor PIDGOV

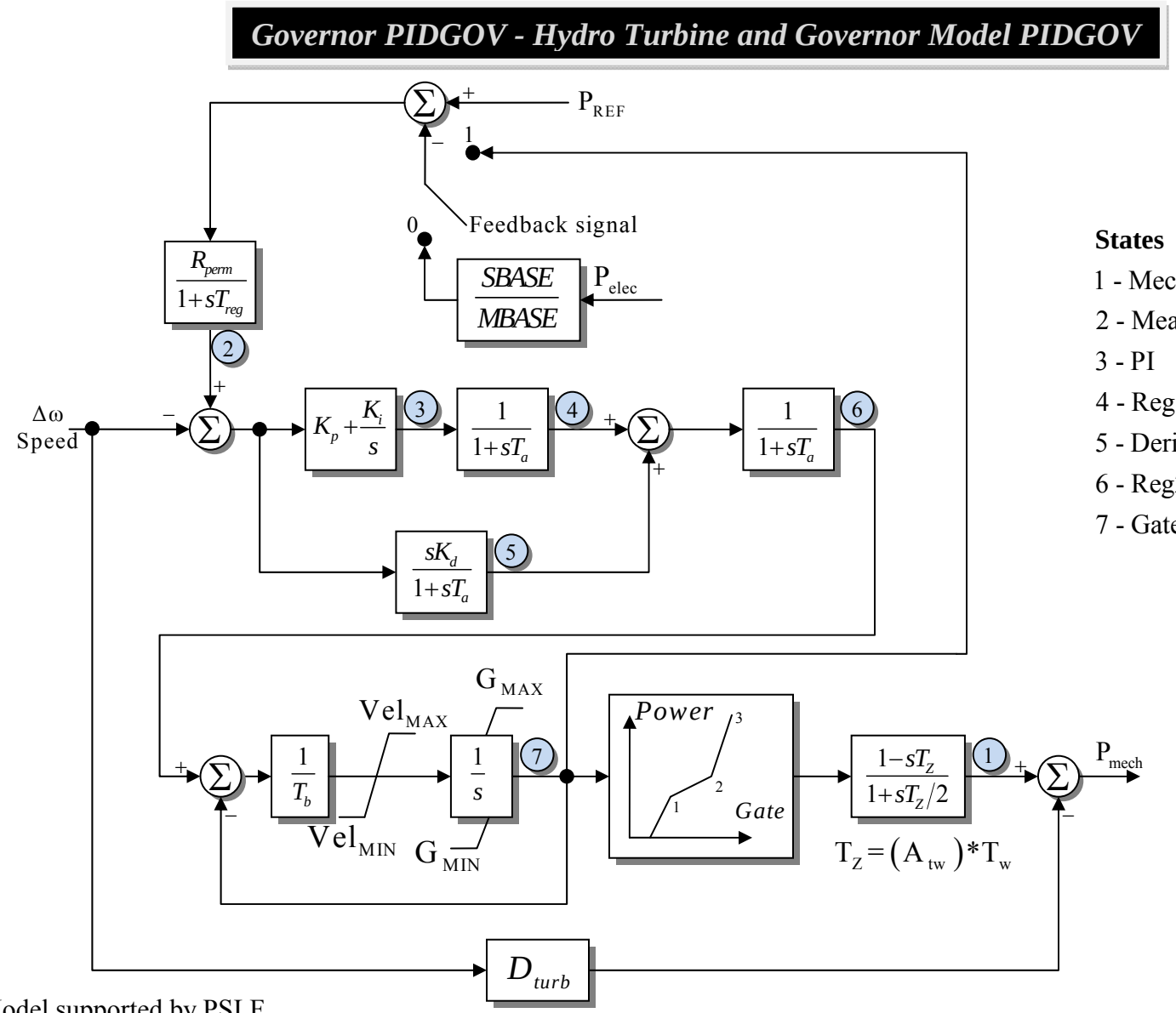

States

1 - Mechanical Output
2 - Measured Delta P
3 - PI
4 - Reg1
5 - Derivative
6 - Reg2
7 - Gate

Model supported by PSLF
Model supported by PSSE

(G0,0), (G1,P1), (G2,P2), (1,P3) are x,y coordinates of Power vs. Gate function

Governor TGOV1

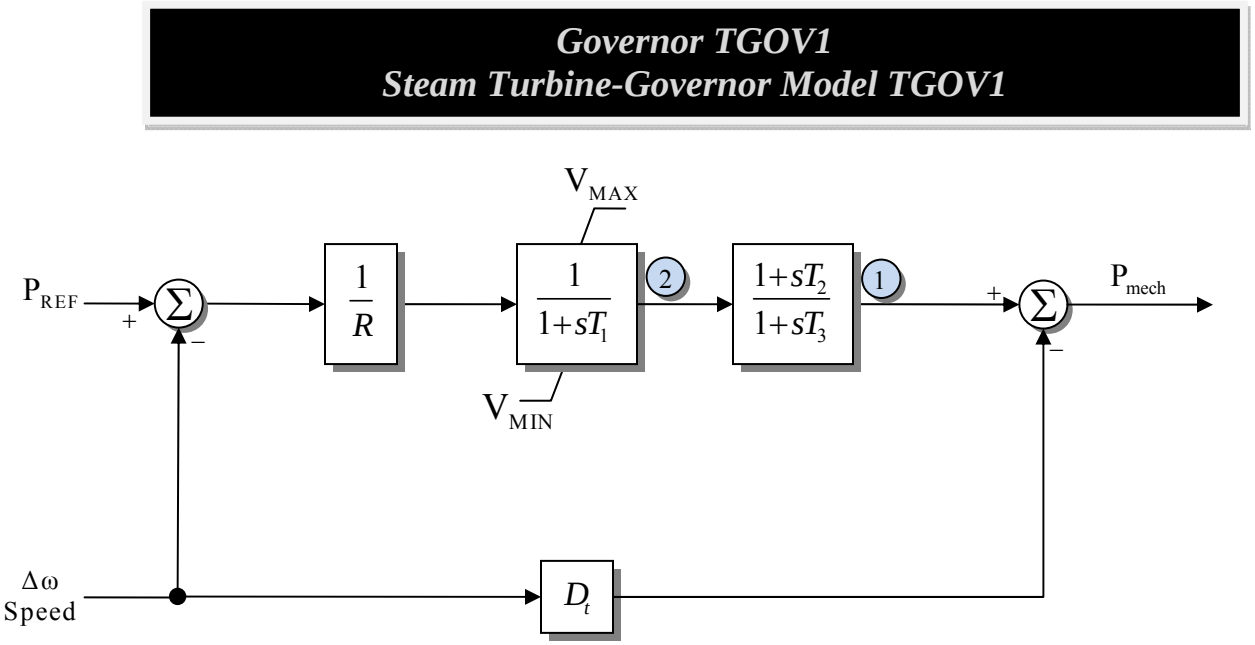

States

1 - Turbine Power

2 - Valve Position

Model supported by PSLF
Model supported by PSSE

Governor TGOV2

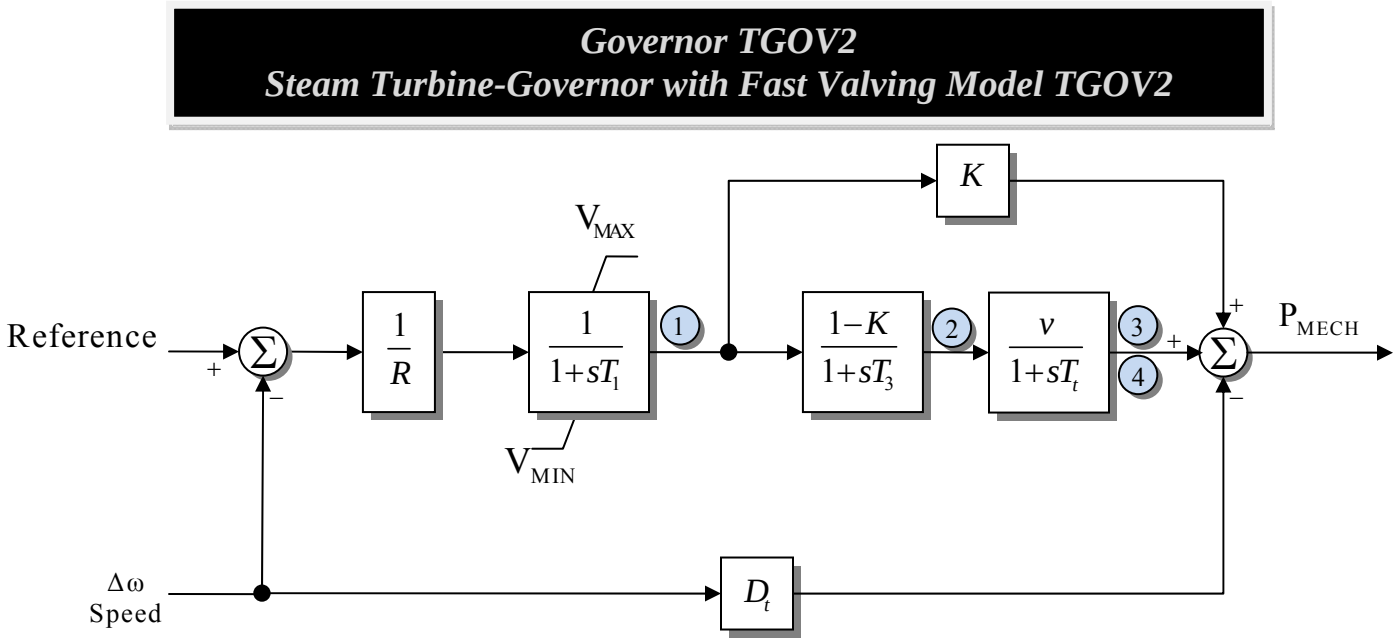

T_I: Time to initiate fast valving.

T_A: Intercept valve, v, fully closed T_A seconds after fast valving initiation.

T_B: Intercept valve starts to reopen T_B seconds after fast valving initiation.

T_C: Intercept valve again fully open T_C seconds after fast valving initiation.

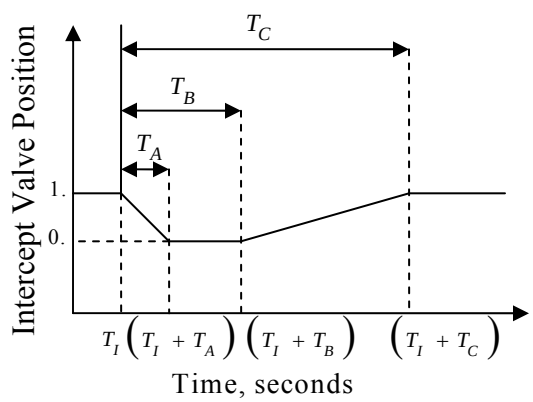

States

1 - Throttle

2 - Reheat Pressure

3 - Reheat Power

4 - Intercept Valve

Model supported by PSSE

Governor TGOV3

Governor TGOV3
Modified IEEE Type 1 Speed-Governor with Fast Valving Model

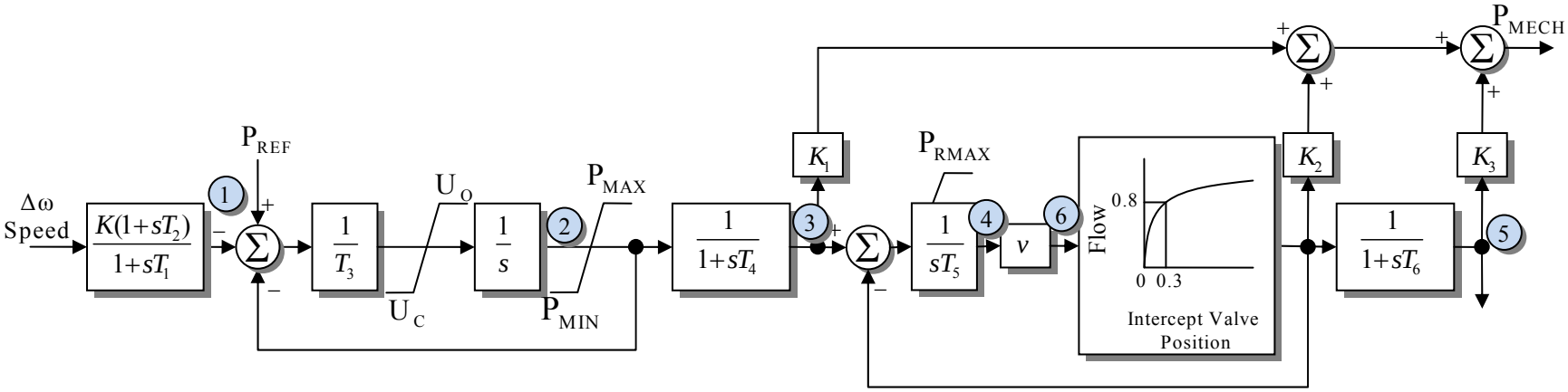

T_I: Time to initiate fast valving.

T_A: Intercept valve, *v*, fully closed T_A seconds after fast valving initiation.

T_B: Intercept valve starts to reopen T_B seconds after fast valving initiation.

T_C: Intercept valve again fully open T_C seconds after fast valving initiation.

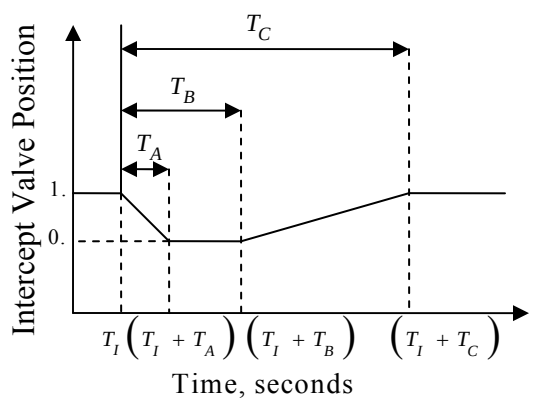

States

1 - LL
2 - StateT3
3 - StateT4
4 - StateT5
5 - StateT6
6 - Intercept Valve

Model supported by PSLF
Model supported by PSSE

Gv1,Pgv1 ... Gv6, Pgv6 are x,y coordinates of Flow vs. Intercept Valve Position function

Governor TGOV5

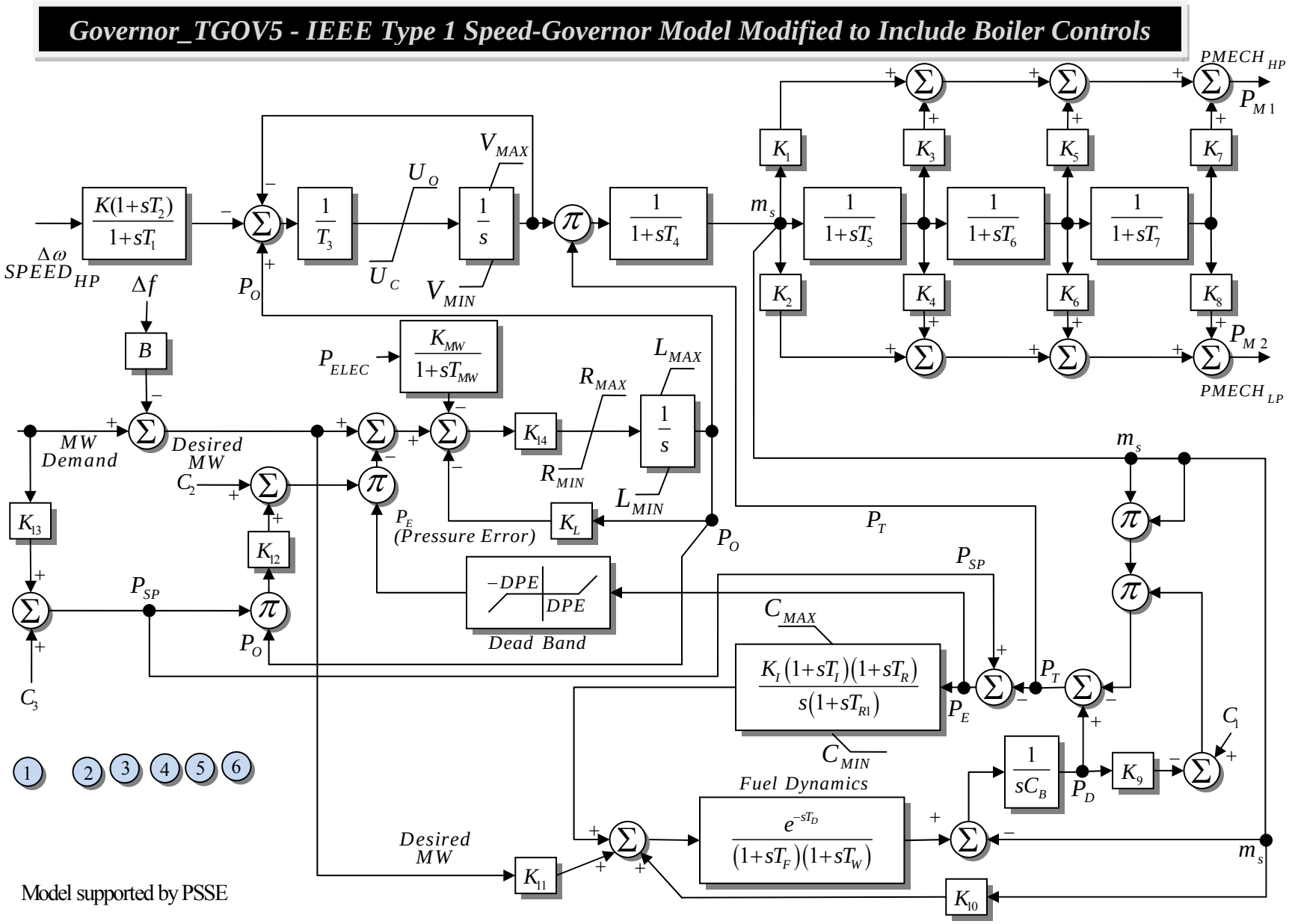

Governor URGS3T

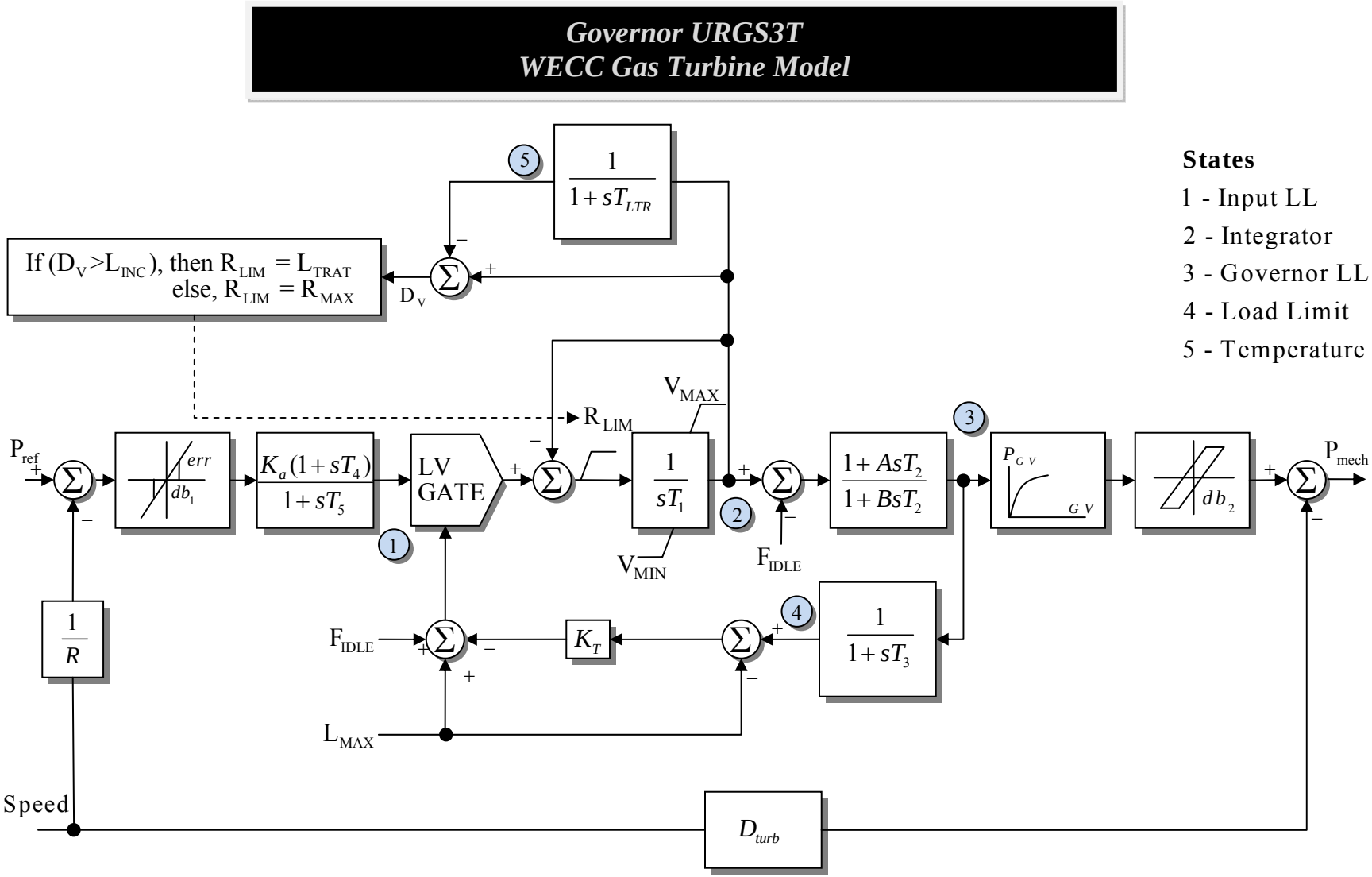

Model supported by PSSE

GV1, PGV1...GV5, PGV5 are the x,y coordinates of P_{GV} vs. GV block

Governor WT12T1

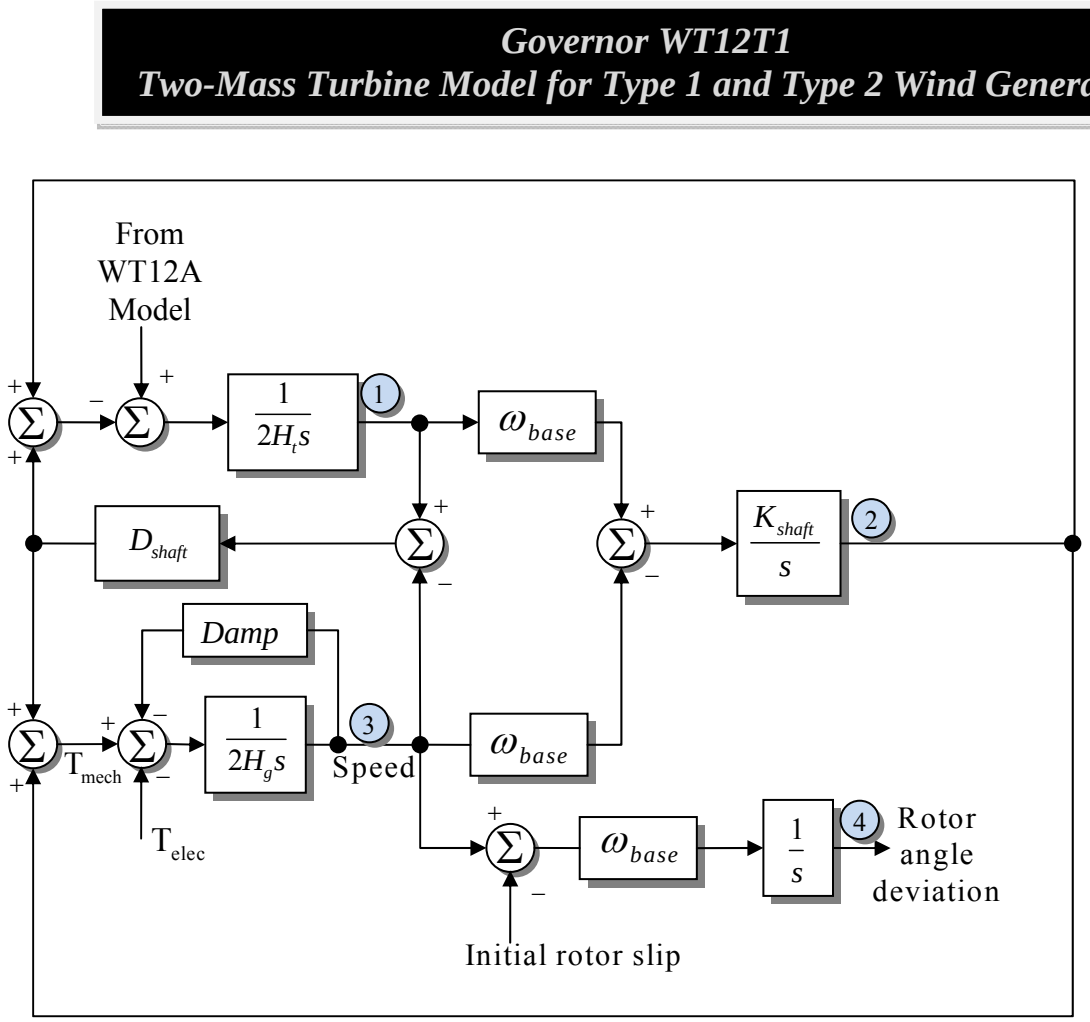

$H_t = H \times H_{tfrac}$

$H_g = H - H_t$

$$K_{shaft} = \frac{2H_t \times H_g \times (2\pi \times Freq1)^2}{H \times \omega_0}$$

Model supported by PSSE

States

1 - TurbineSpeed

2 - ShaftAngle

3 - GenSpeed

4 - GenDeltaAngle

Governor W2301

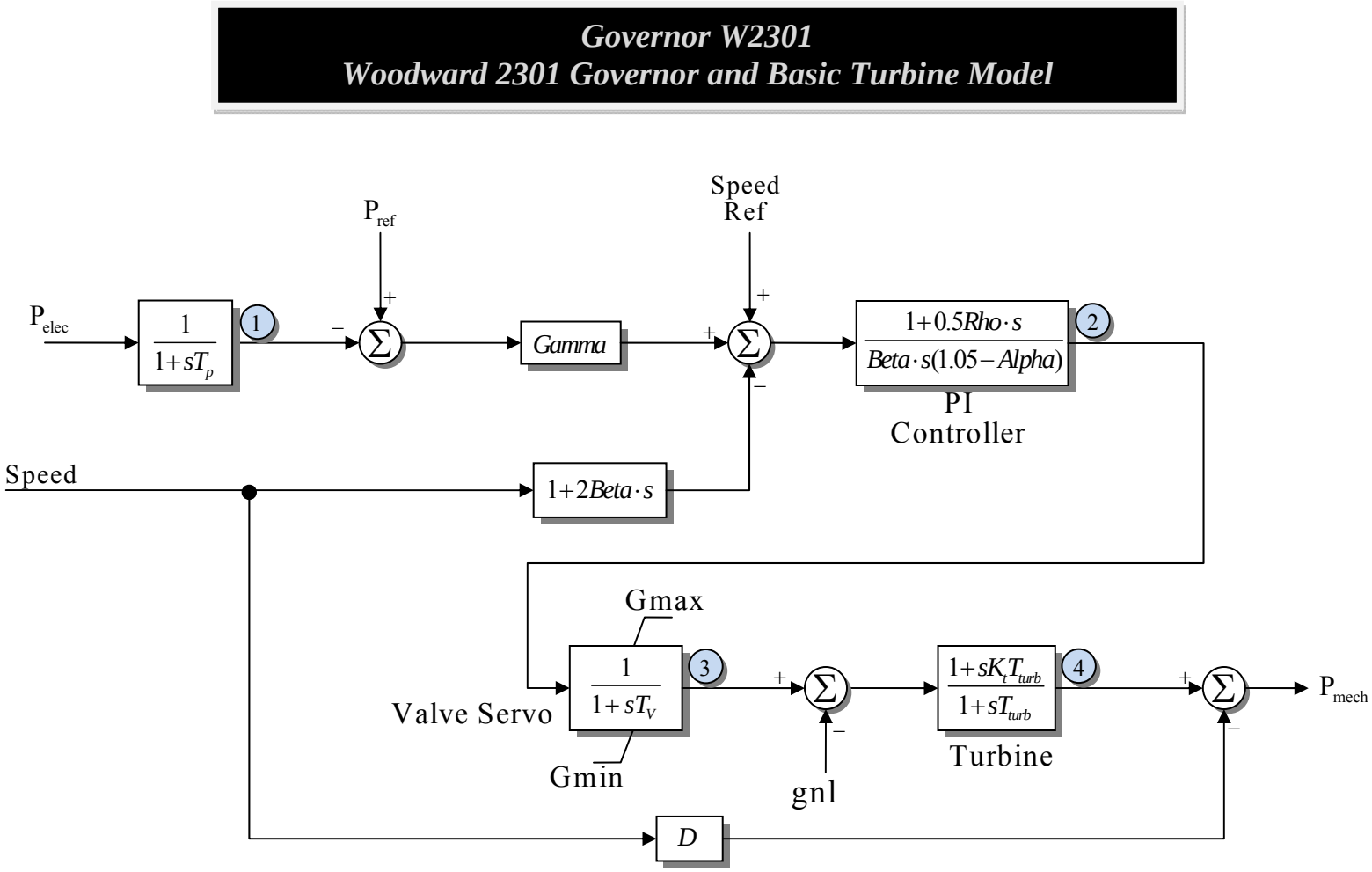

States

1 - PelecSensed

2 - PI

3 - Valve

4 - Turbine

Gain, Velamx read but not implemented in Simulator.

Model supported by PSLF

Governor WEHGOV

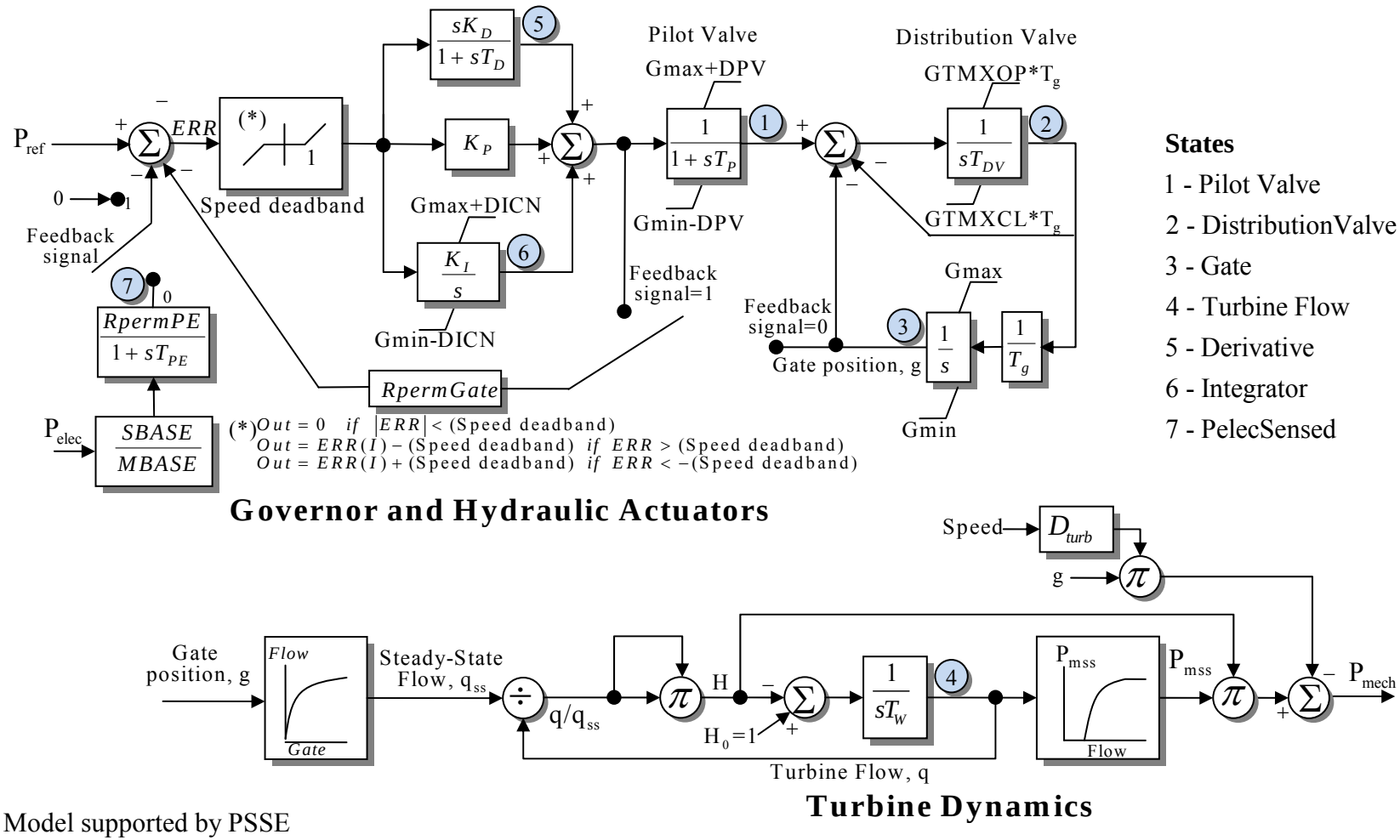

Model supported by PSSE

(Gate 1, Flow G1)...(Gate 5, Flow G5) are x,y coordinates of Flow vs. Gate function

(Flow P1, PMECH 1)...(Flow P10, PMECH 10) are x,y coordinates of Pmss vs. Flow function

Governor WESGOV

Governor WESGOV
Westinghouse Digital Governor for Gas Turbine Model

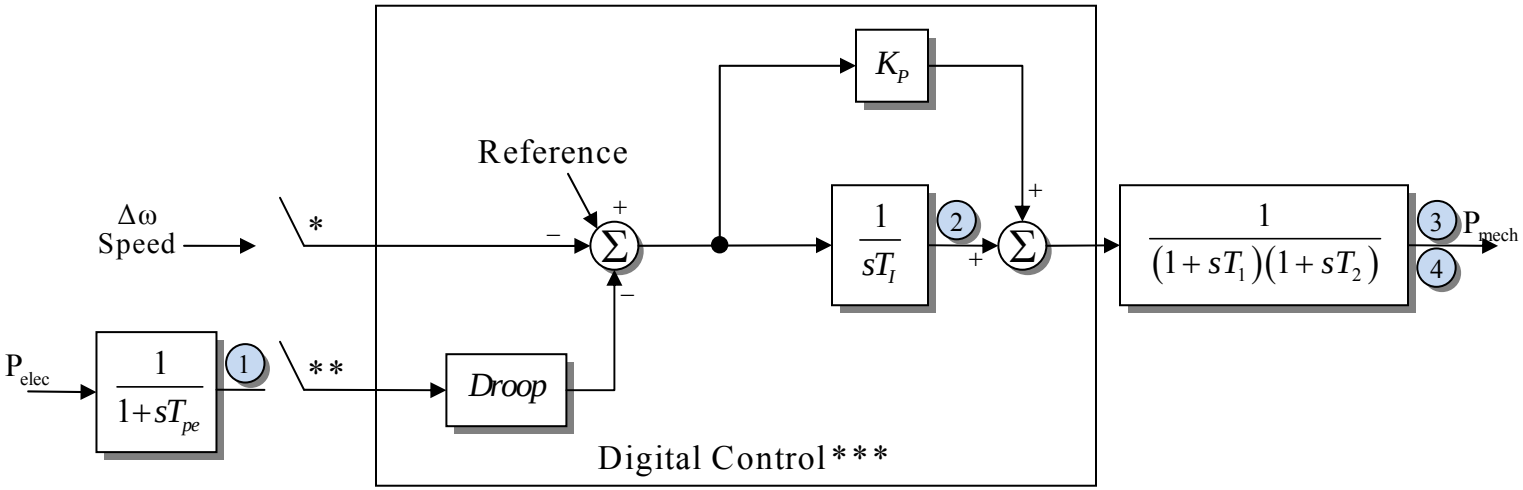

*Sample hold with sample period defined by Delta TC.
**Sample hold with sample period defined by Delta TP.
***Maximum change is limited to A_{lim} between sampling times.

States

1 - PEMeas

2 - Control

3 - Valve

4 - PMech

Model supported by PSSE
A_{lim} read but not implemented in Simulator

Governor WNDTGE

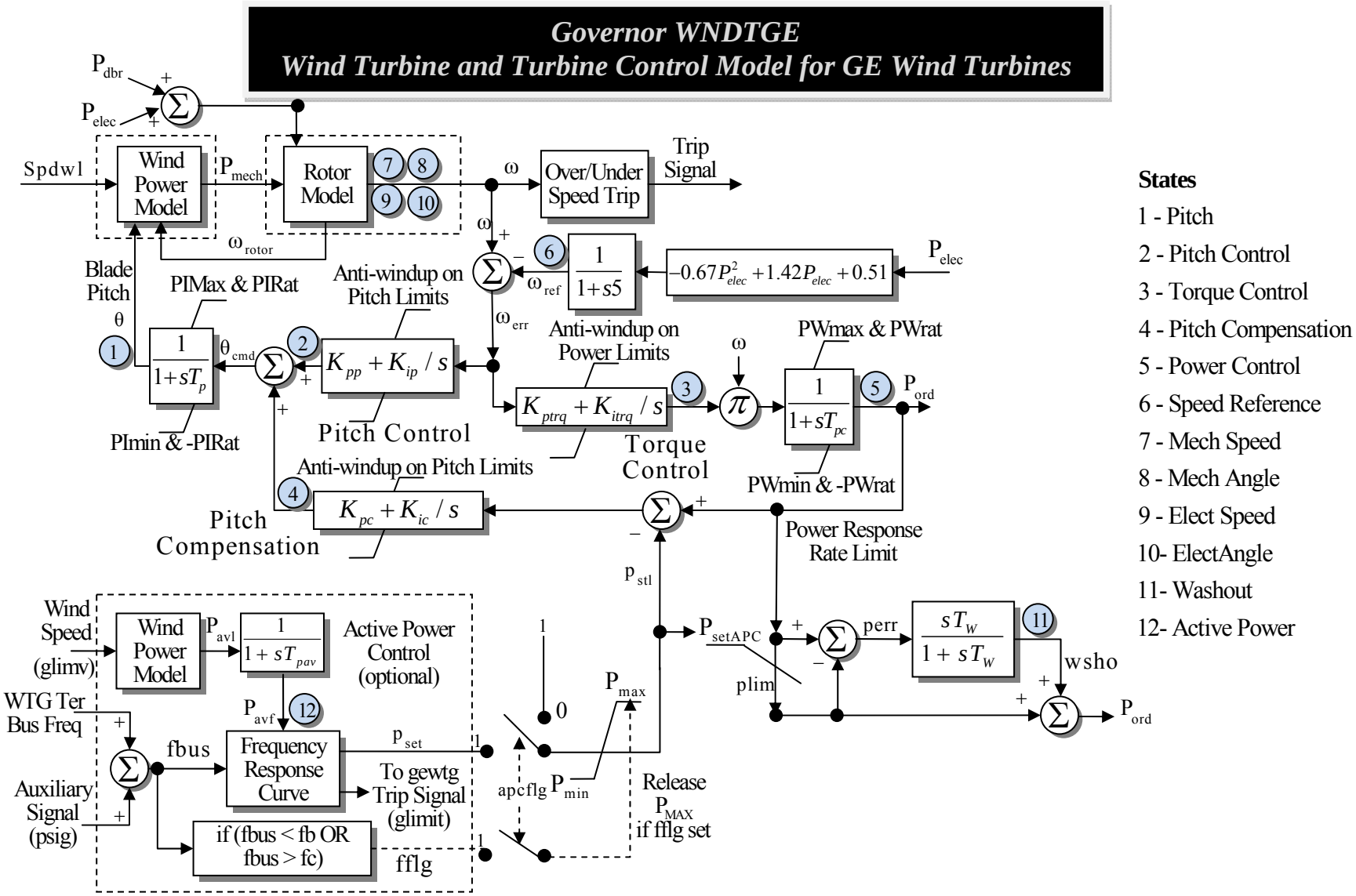

States

1 - Pitch
2 - Pitch Control
3 - Torque Control
4 - Pitch Compensation
5 - Power Control
6 - Speed Reference
7 - Mech Speed
8 - Mech Angle
9 - Elect Speed
10- ElectAngle
11- Washout
12- Active Power

Model supported by PSLF

Apcflg is set to zero. Limits on states 2 and 3 and trip signal are not implemented. Simulator calculates initial windspeed Spdwl.

Governor WNDTGE
Wind Turbine and Turbine Control Model for GE Wind Turbines

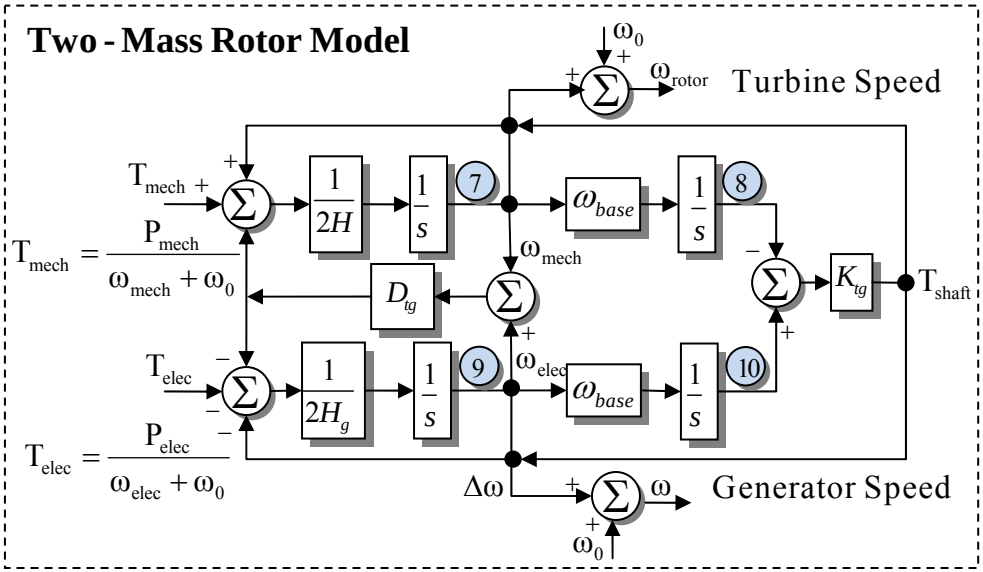

Wind Power Model

$$P_{mech} = \frac{\rho}{2} A_r v_w^3 C_p(\lambda, \theta)$$

$$\lambda = K_b(\omega / v_w)$$

$$C_p(\lambda, \theta) = \sum_{i=0}^{4} \sum_{j=0}^{4} \alpha_{ij} \theta^i \lambda^j$$

See charts for curve fit values

Model supported by PSLF

Governor WNDTRB

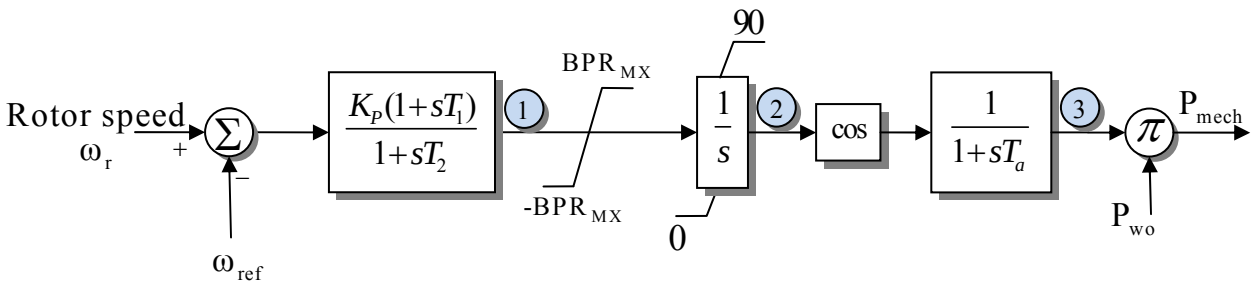

States

1 - Input

2 - Blade Angle (Deg)

3 - Blade Pitch Factor

Model supported by PSLF

Governor WPIDHY

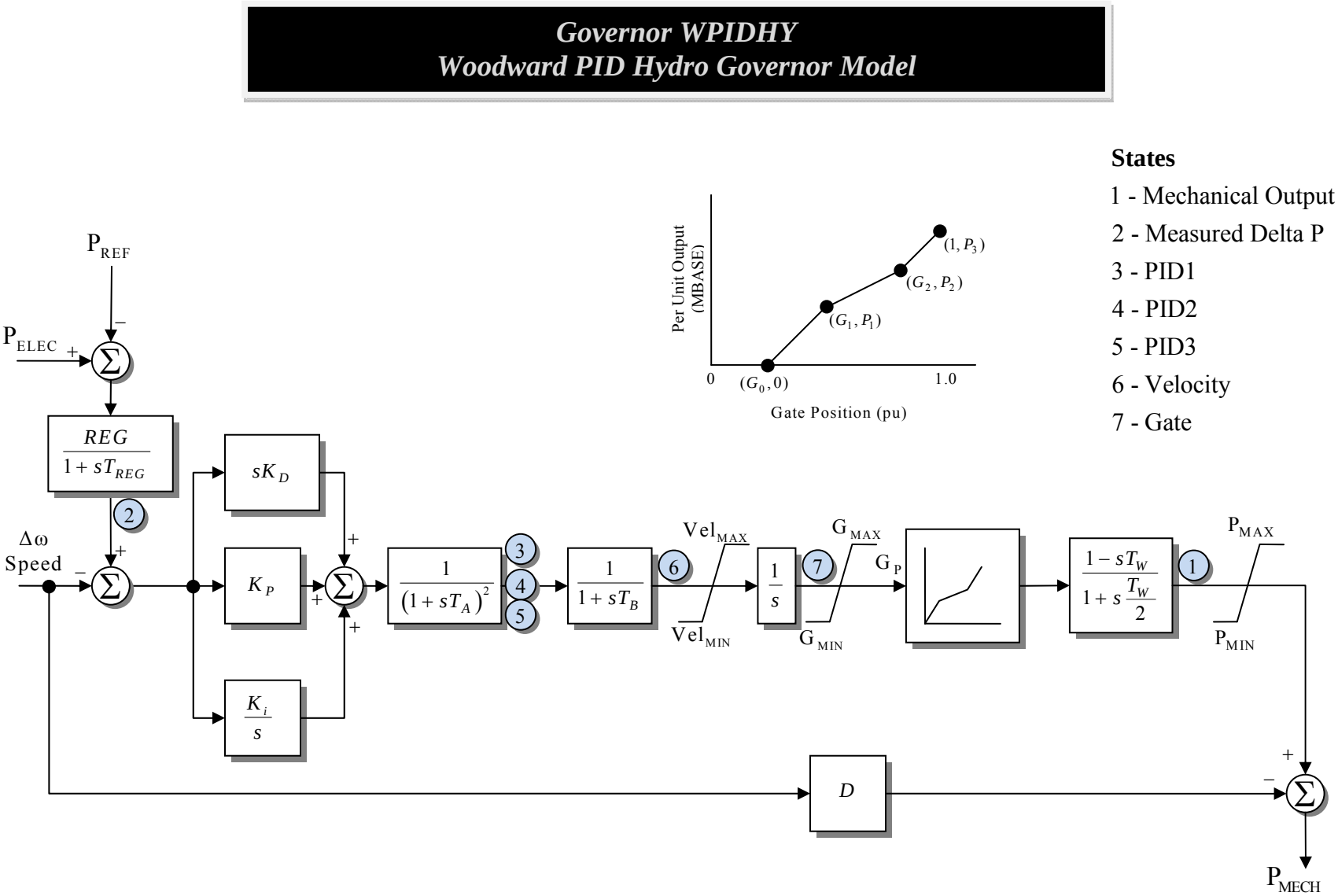

Model supported by PSSE

Governor WSHYDD

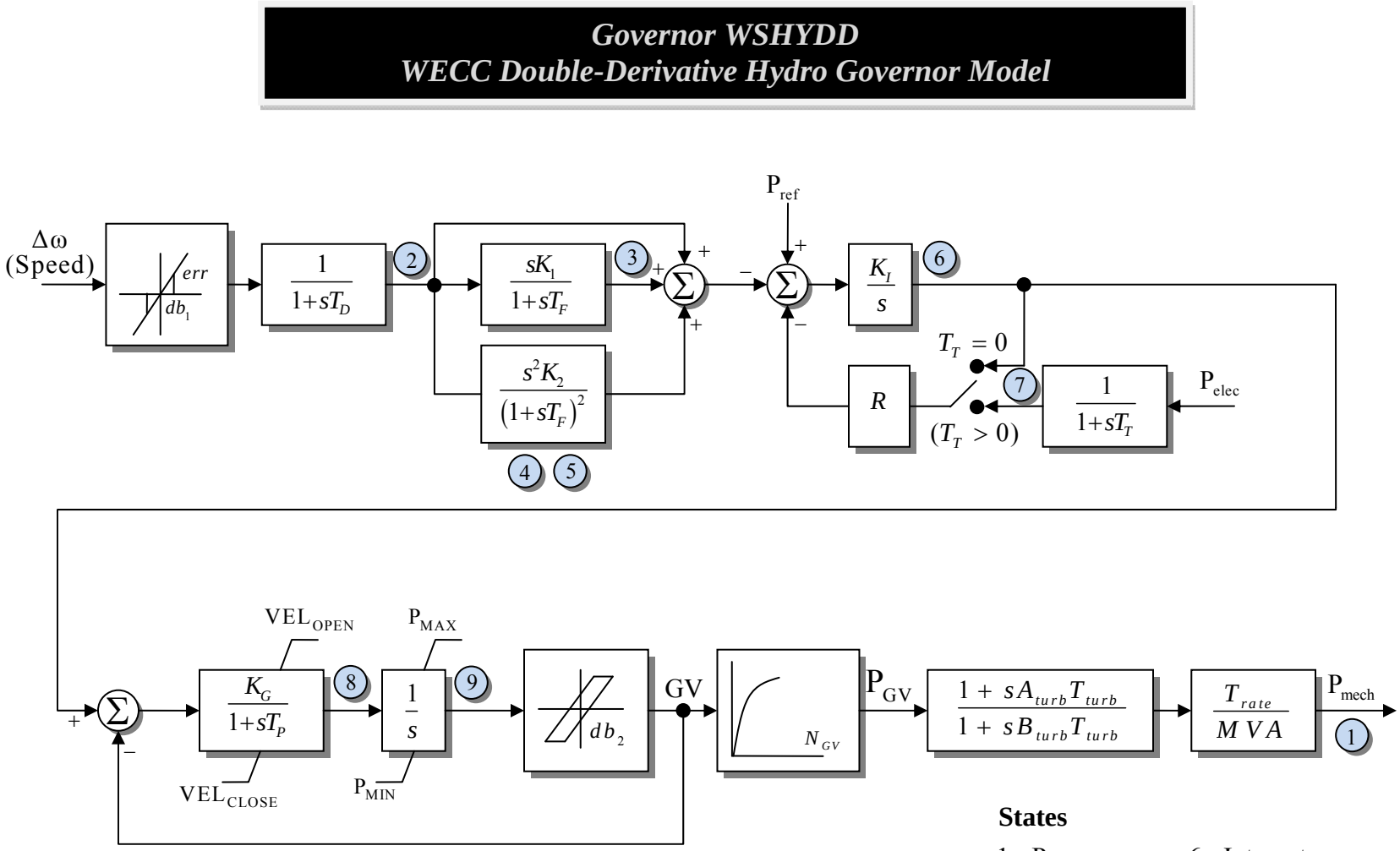

States

1 - P_{mech}	6 - Integrator
2 - T_D	7 - P_{elec} Sensed
3 - K_1	8 - Valve
4 - K_2 first	9 - Gate
5 - K_2 second	

Model supported by PSSE

Inputs GV1, PGV1...GV5, PGV5 are the x,y coordinates of N_{GV} block

Governor WSHYGP

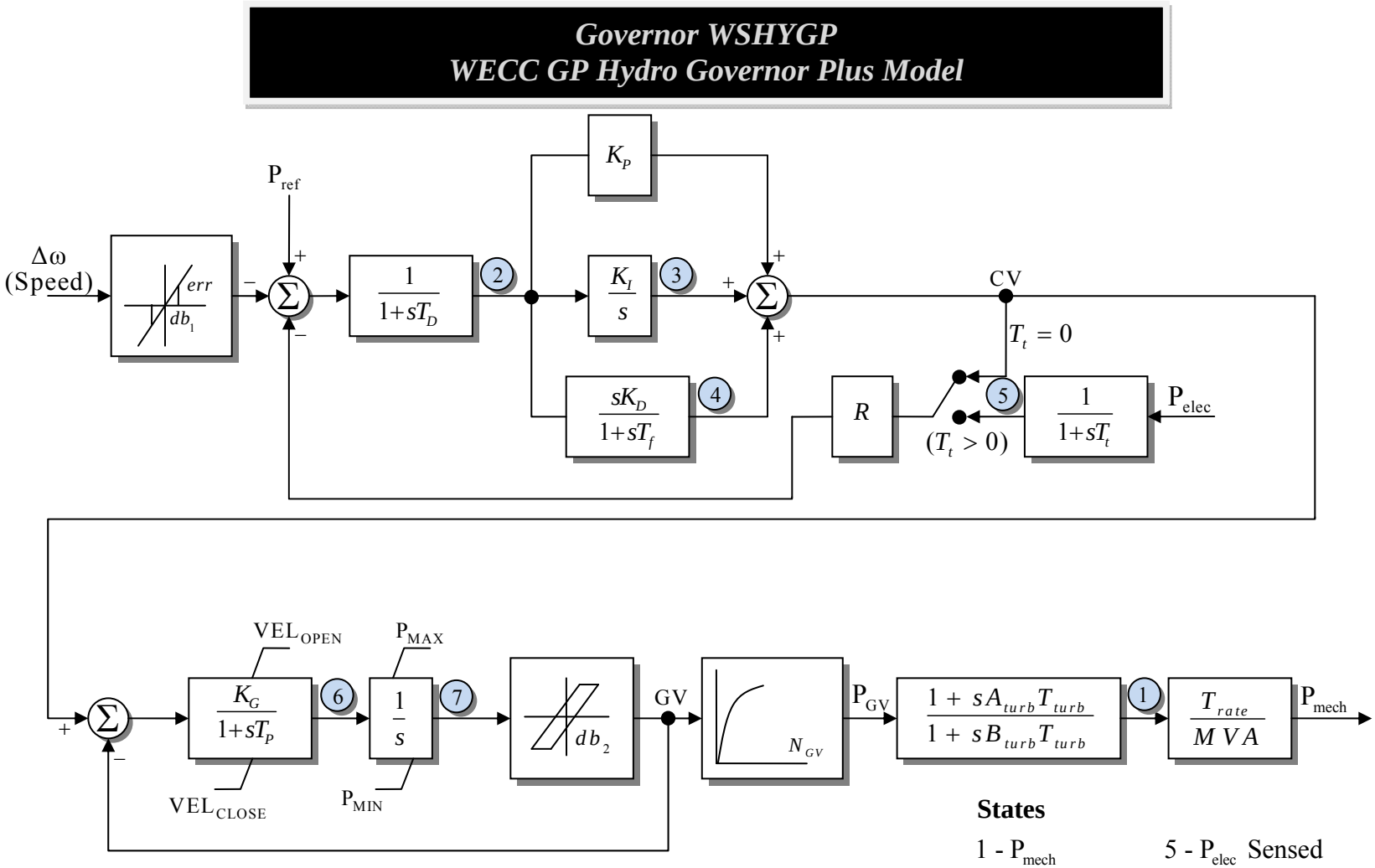

States

1 - P_{mech}	5 - P_{elec} Sensed
2 - T_D	6 - Valve
3 - Integrator	7 - Gate
4 - Derivative	

Model supported by PSSE

GV1, PGV1...GV5, PGV5 are the x,y coordinates of N_{GV} block

Governor WSIEG1

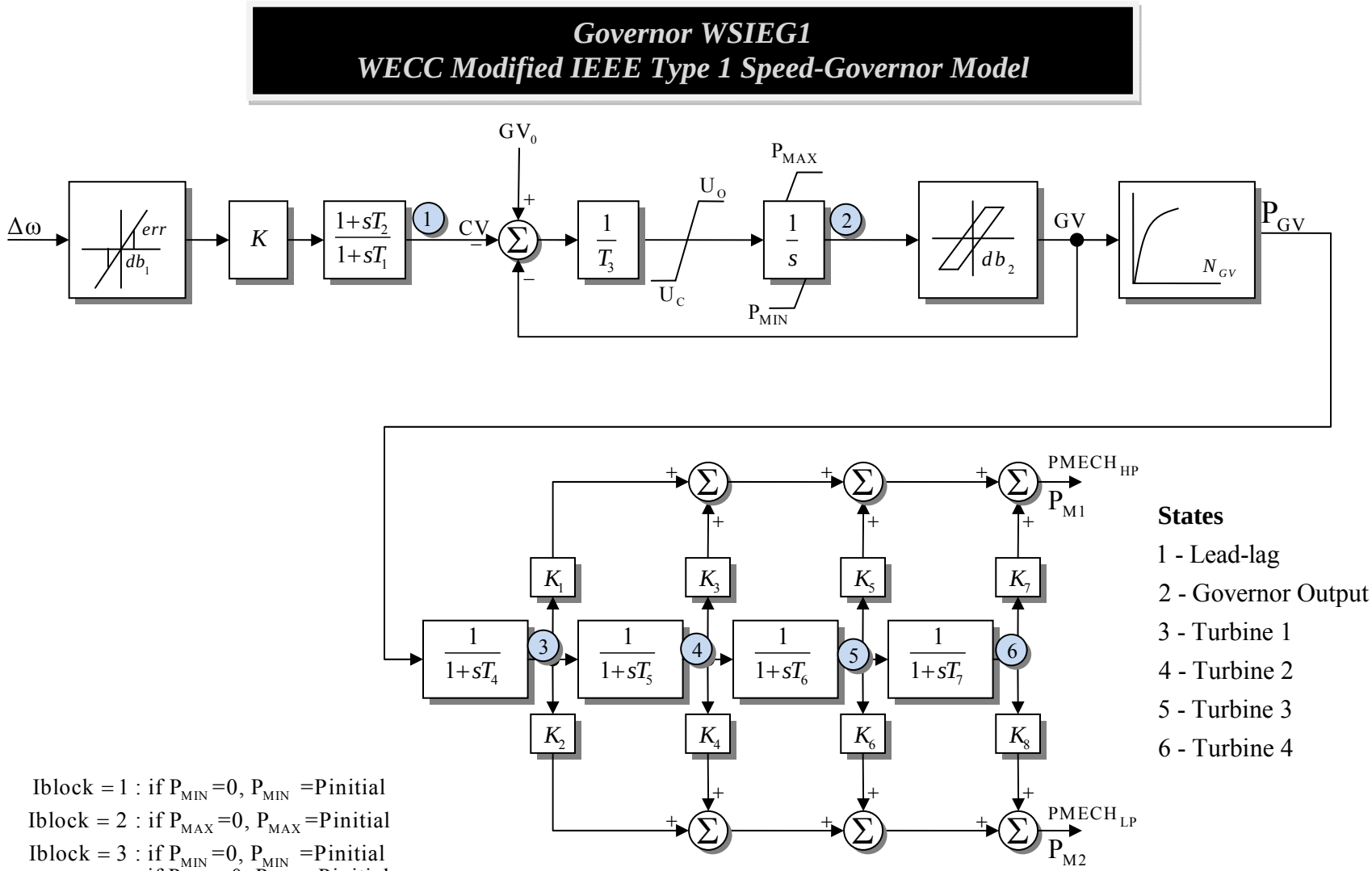

States

1 - Lead-lag
2 - Governor Output
3 - Turbine 1
4 - Turbine 2
5 - Turbine 3
6 - Turbine 4

Iblock = 1 : if P_{MIN} =0, P_{MIN} =Pinitial
Iblock = 2 : if P_{MAX} =0, P_{MAX} =Pinitial
Iblock = 3 : if P_{MIN} =0, P_{MIN} =Pinitial
: if P_{MAX} =0, P_{MAX} =Pinitial

GV1, PGV1...GV5, PGV5 are the x,y coordinates of N_{GV} block
Model supported by PSSE

Governor WT1T

Governor WT1T
Wind Turbine Model for Type-1 Wind Turbines

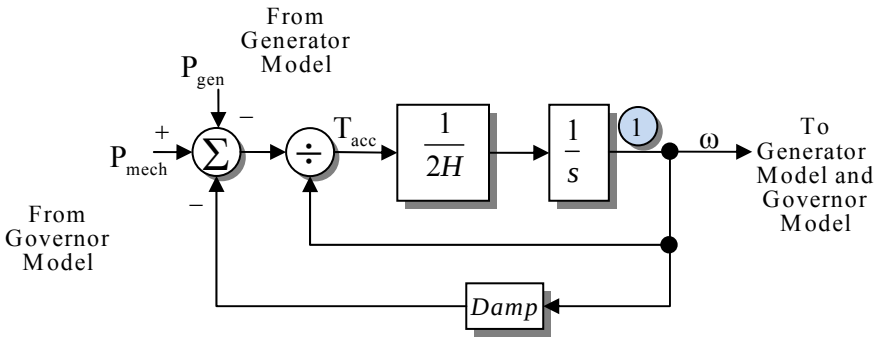

Type 1 WTG Turbine One - mass Model

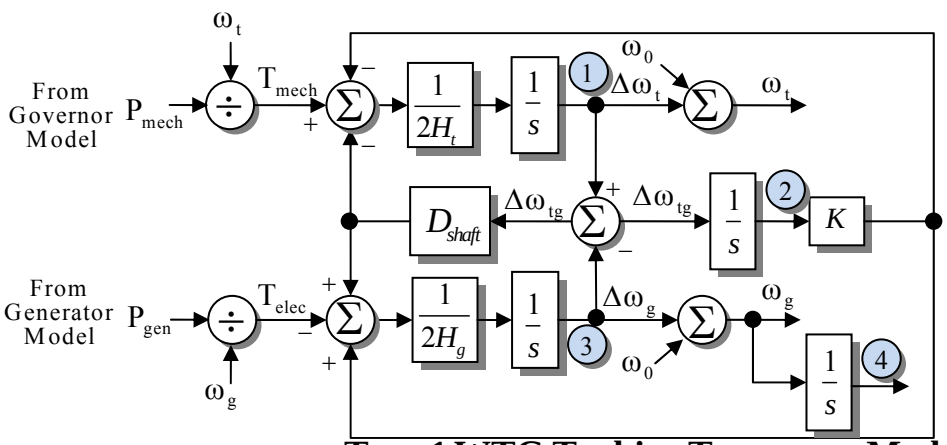

Type 1 WTG Turbine Two - mass Model

States

1 - TurbineSpeed
2 - ShaftAngle
3 - GenSpeed
4 - GenDeltaAngle

$$H_t = H \times H_{tfrac}$$
$$H_g = H - H_t$$
$$K = \frac{2H_t \times H_g \times (2\pi \times Freq1)^2}{H}$$

Model supported by PSLF

Governor WT3T

Governor WT3T
Wind Turbine Model for Type-3 (Doubly-fed) Wind Turbines

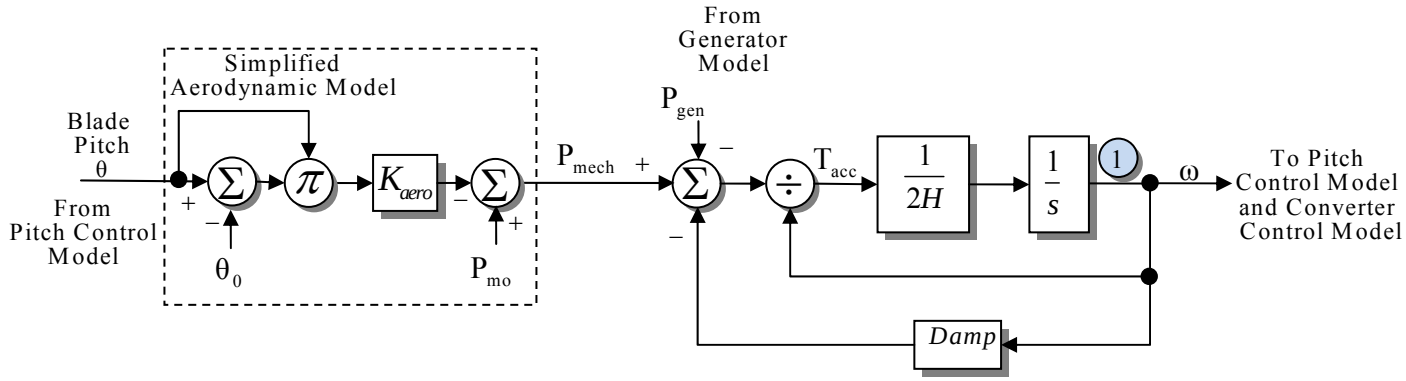

Type 3 WTG Turbine One - mass Model

When windspeed > rated windspeed, blade pitch initialized to $\theta = \frac{Theta2}{0.75}\left(1 - \frac{1}{V_W{}^2}\right)$

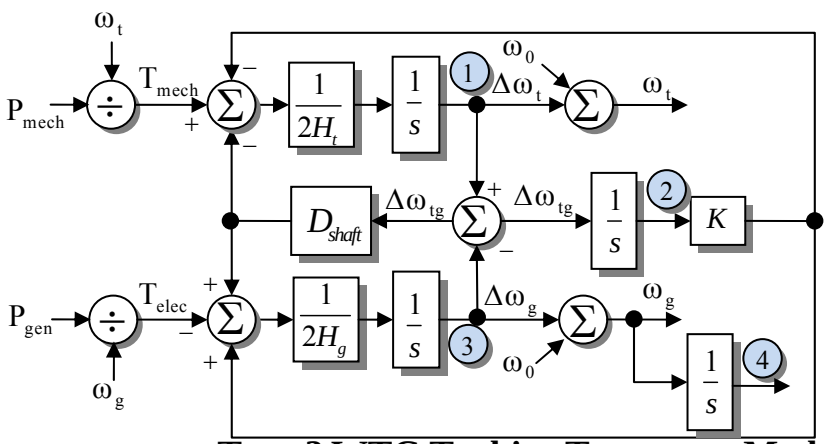

Type 3 WTG Turbine Two - mass Model

States

1 - TurbineSpeed
2 - ShaftAngle
3 - GenSpeed
4 - GenDeltaAngle

$H_t = H \times H_{tfrac}$

$H_g = H - H_t$

$$K = \frac{2H_t \times H_g \times (2\pi \times Freq1)^2}{H}$$

Model supported by PSLF

Governor WT3T1

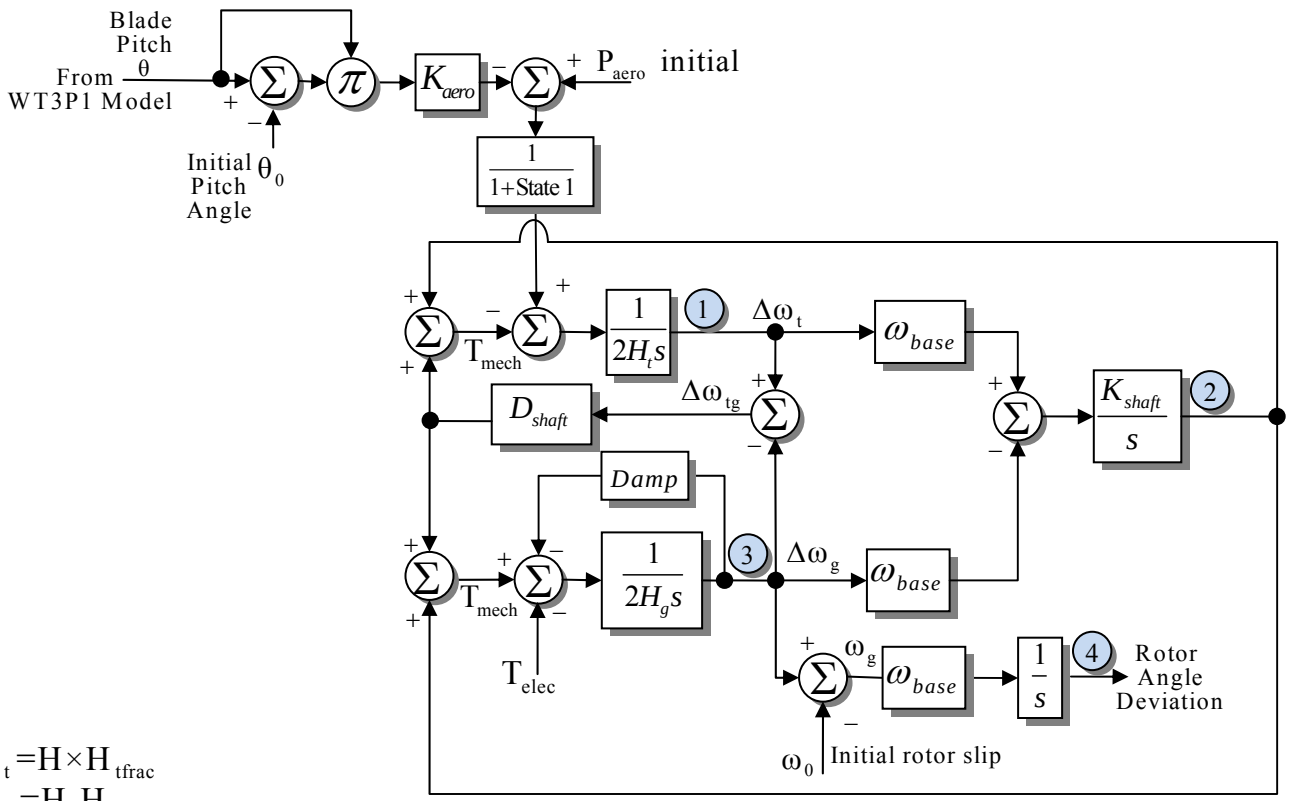

$$H_t = H \times H_{tfrac}$$

$$H_g = H - H_t$$

$$K_{shaft} = \frac{2H_t \times H_g \times (2\pi \times Freq1)^2}{H \times \omega_0}$$

Model supported by PSSE

Governor BBGOV1

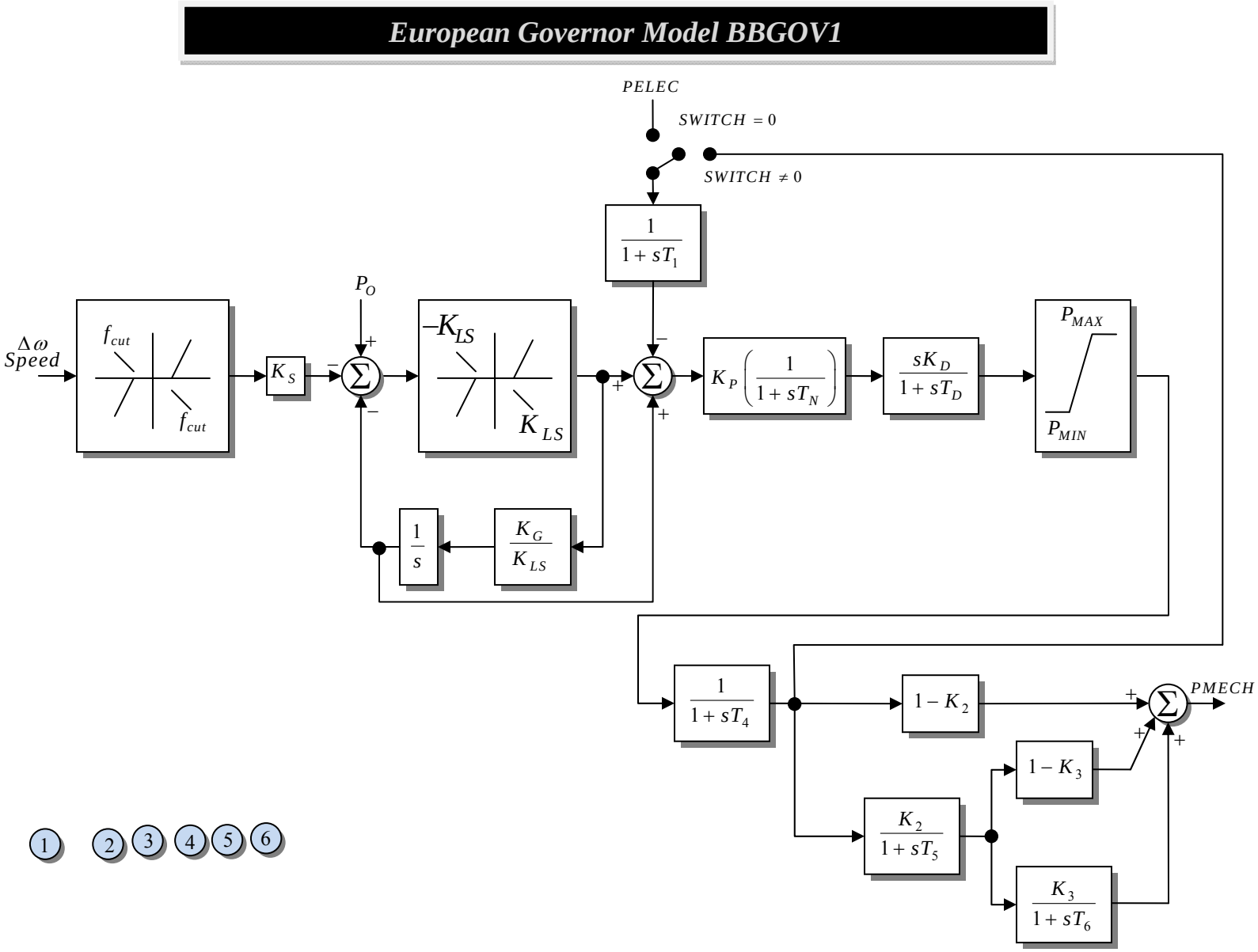

Governor IVOGO

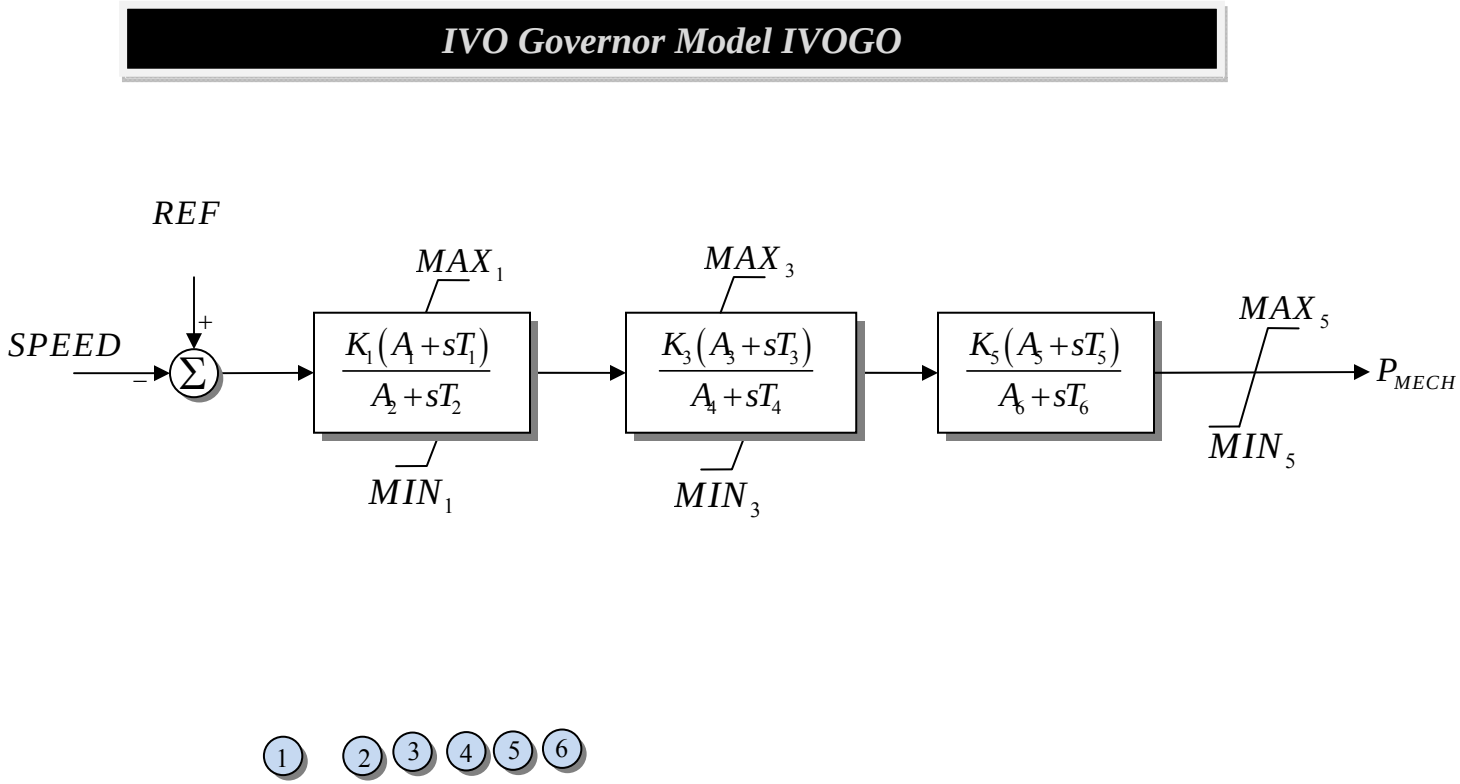

Governor TURCZT

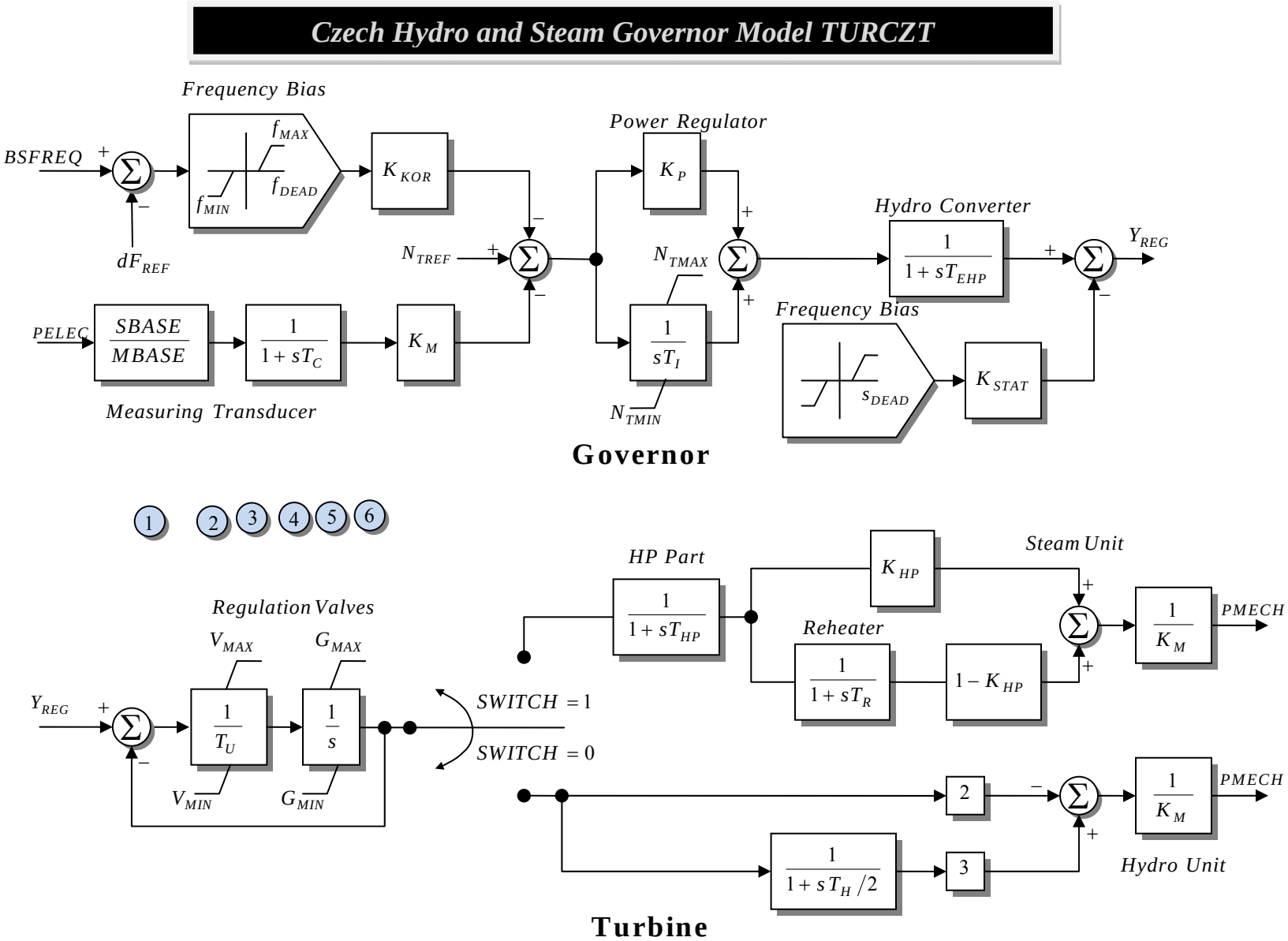

Governor URCSCT

Combined Cycle on Single Shaft Model URCSCT

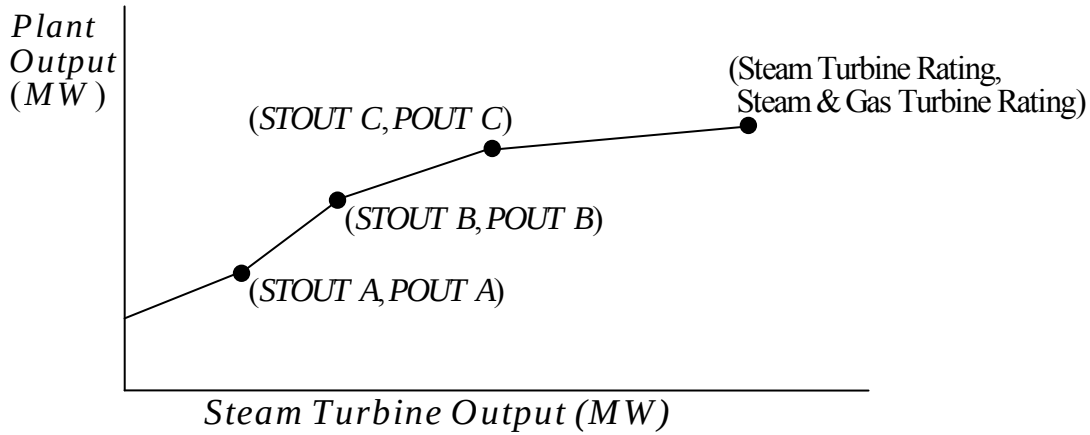

Governor HYGOVM

Hydro Turbine-Governor Lumped Parameter Model HYGOVM

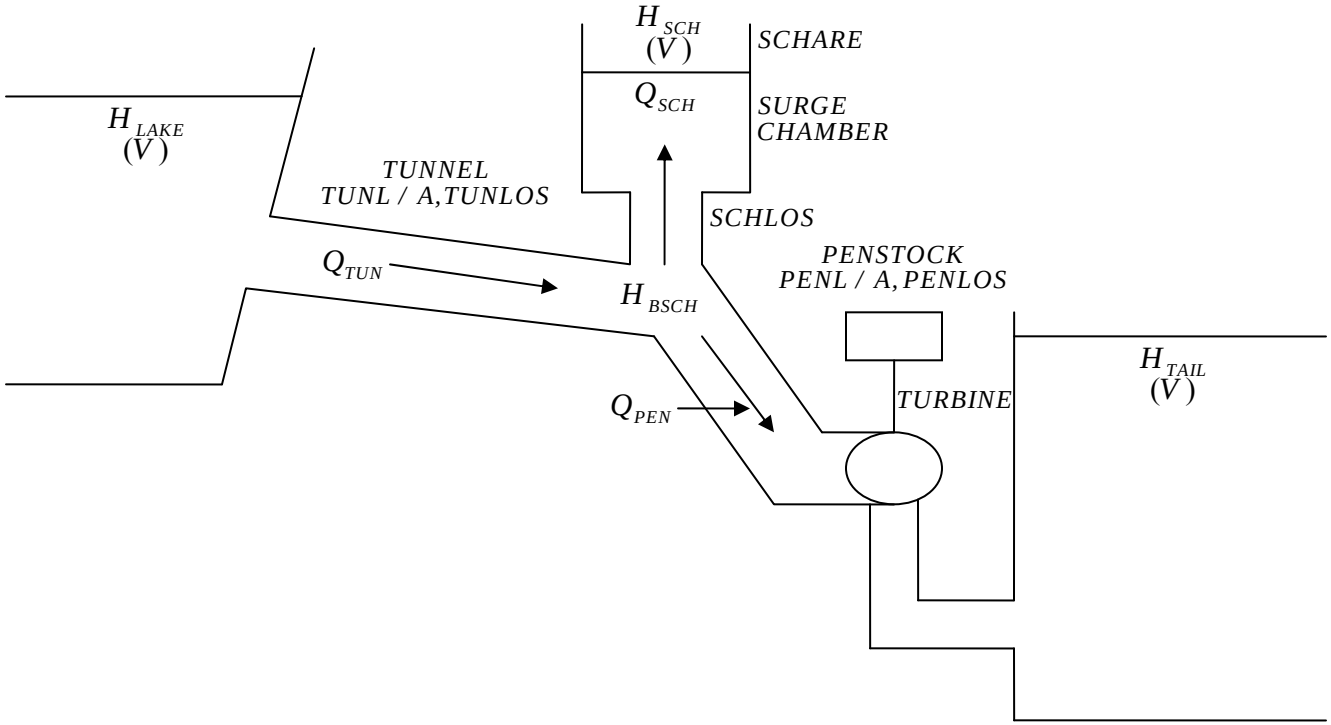

Hydro Turbine Governor Lumped Parameter Model

Governor HYGOVM

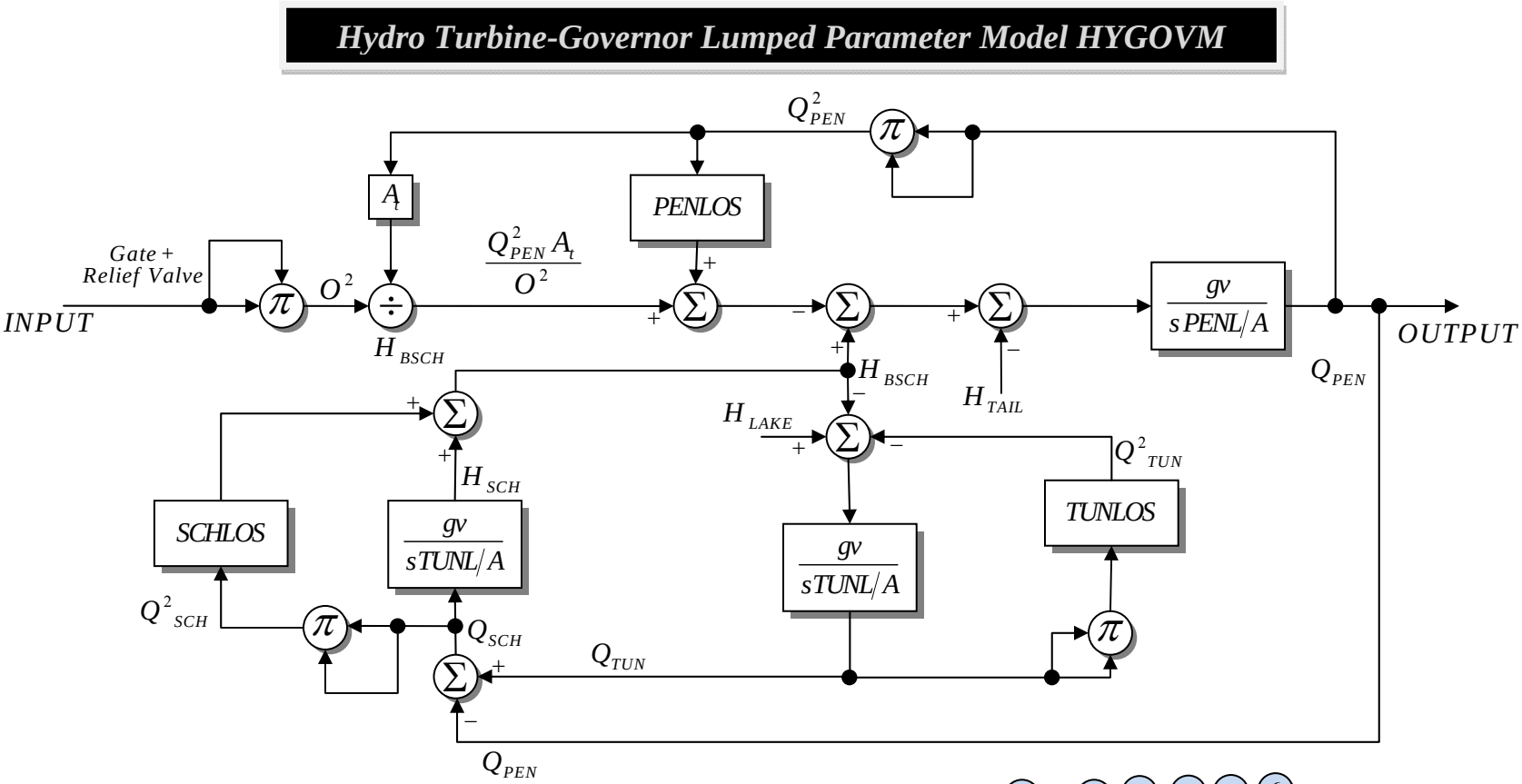

LEGEND :

gv	Gravitational acceleration	A_t	Turbine flow gain
TUNL/A	Summation of length/cross section of tunnel	O	Gate + relief valve opening
SCHARE	Surge chamber cross section	HSCH	Water level in surge chamber
PENLOS	Penstock head loss coeficient	QPEN	Penstock flow
FSCH	Surge chamber orifice head loss coeficient	QTUN	Tunnel flow
PENL/A	Summation of length/cross section of penstock, scroll case and draft tube	QSCH	Surge chamber flow

Hydro Turbine Governor Lumped Parameter Model

Governor HYGOVM

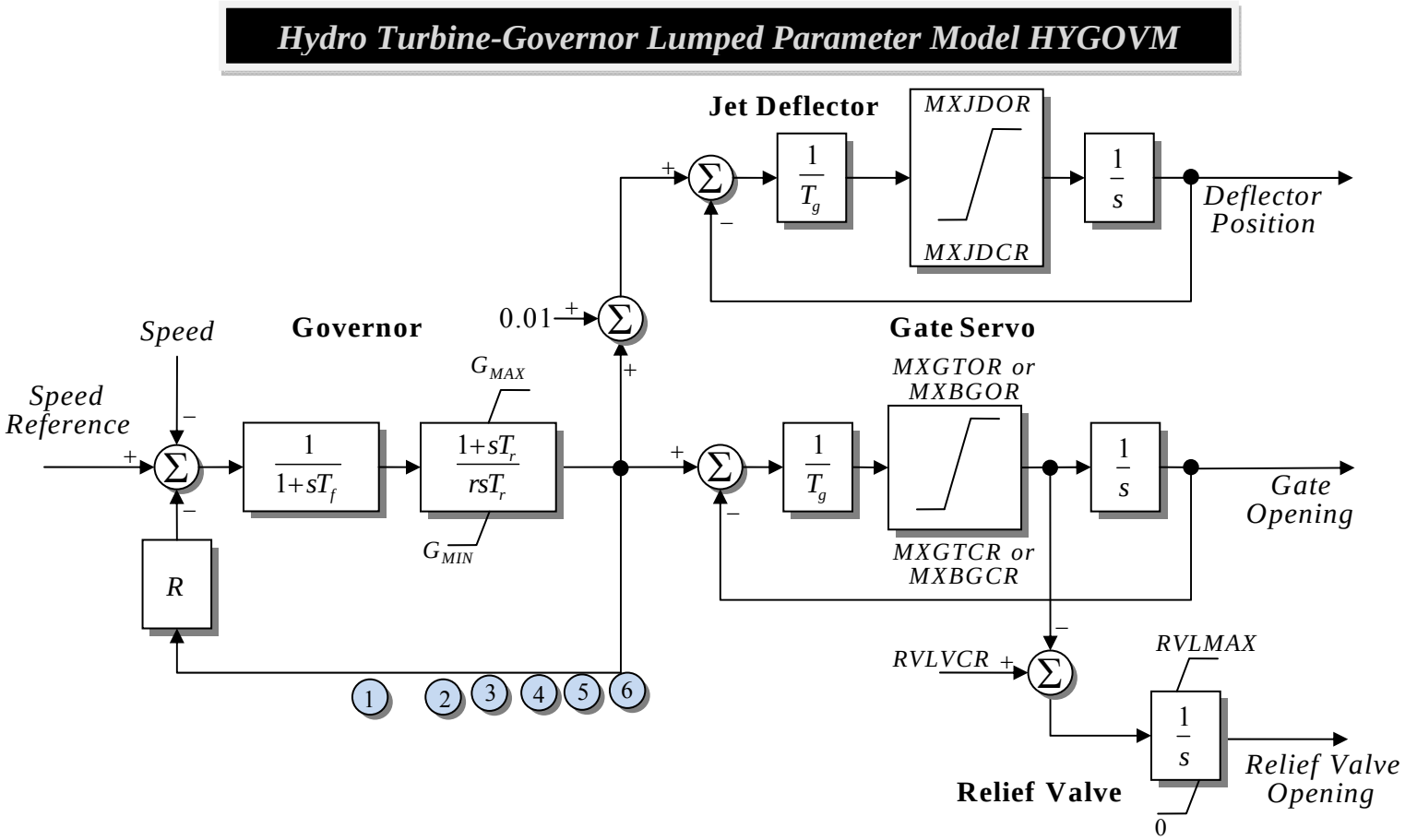

LEGEND :

R	Permanent droop
r	Temporary droop
T_r	Governor time constant
T_f	Filter time constant
T_g	Servo time constant
MXGTOR	Maximum gate opening rate
MXGTCR	Maximum gate closing rate
MXBGOR	Maximum buffered gate opening rate
MXBGCR	Maximum buffered gate closing opening
GMAX	Maximum gate limit
GMIN	Minimum gate limit
RVLVCR	Relief valve closing rate
RVLMAX	Maximum relief valve limit
MXJDOR	Maximum jet deflector opening rate
MXJDCR	Maximum jet deflector closing rate

Governor HYGOVT

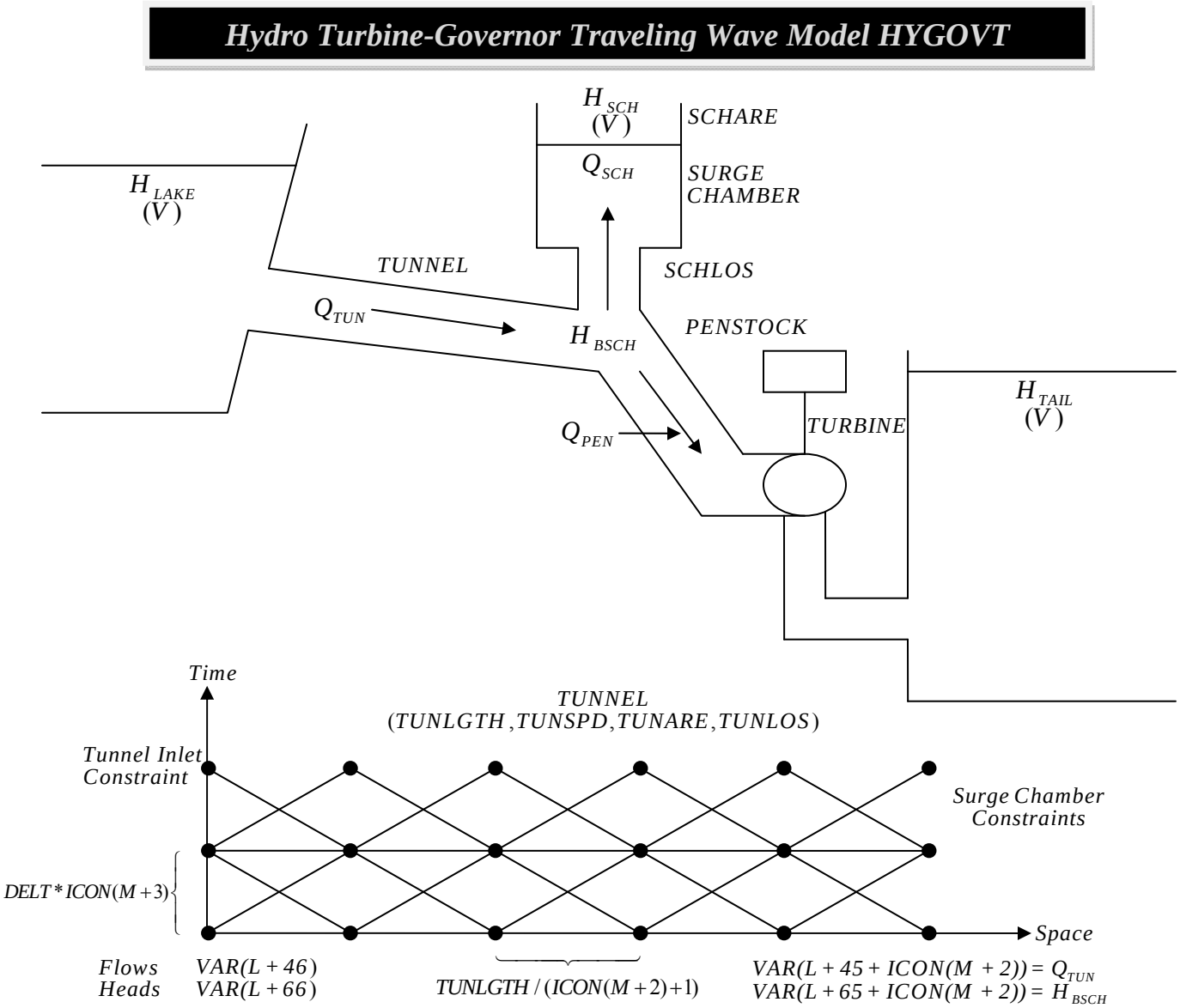

Hydro Turbine Governor Traveling Wave Model

Governor HYGOVT

Hydro Turbine-Governor Traveling Wave Model HYGOVT

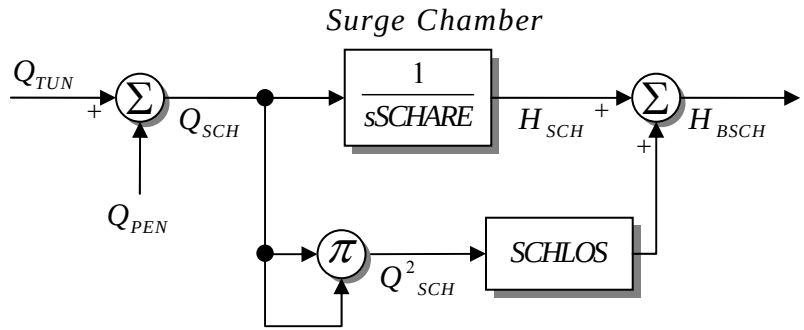

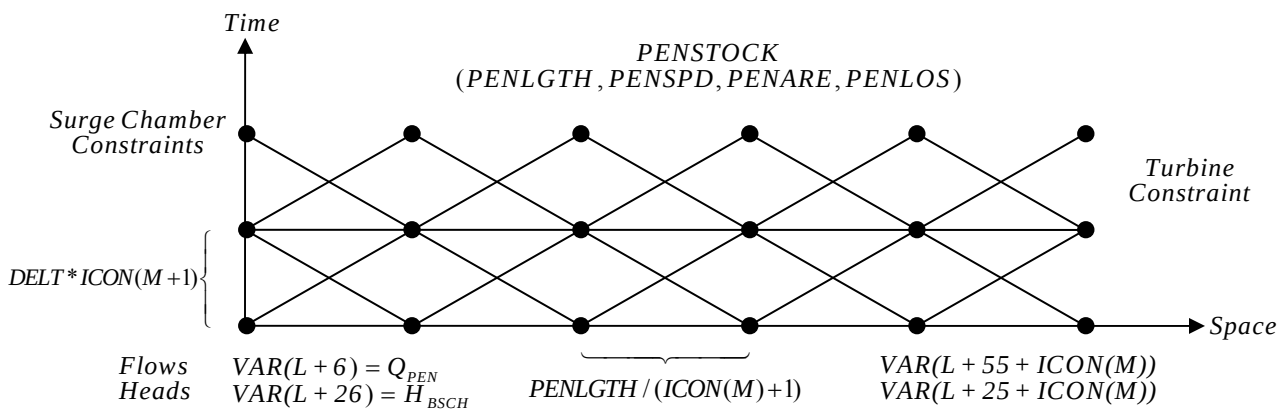

Hydro Turbine Governor Traveling Wave Model

Governor HYGOVT

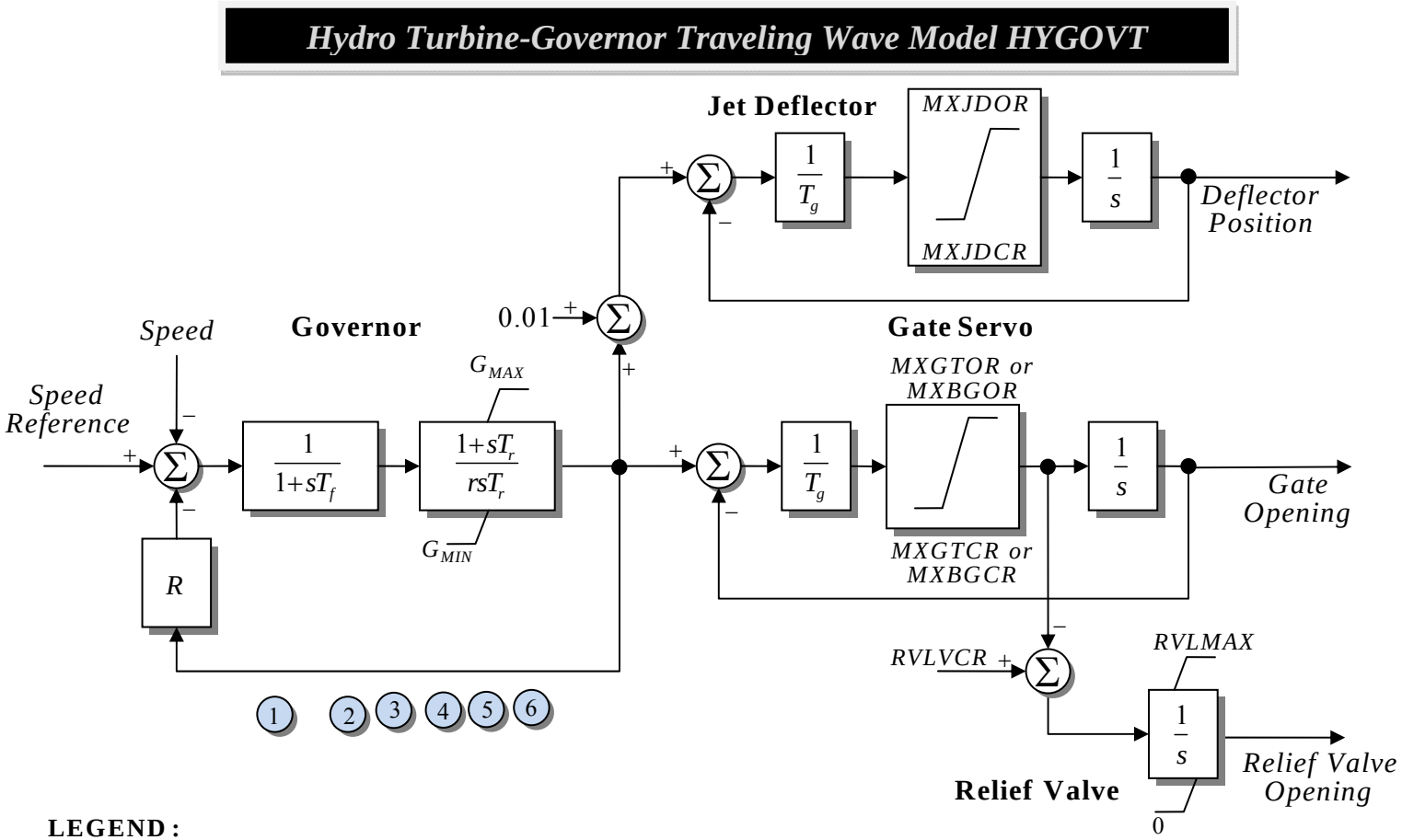

LEGEND :

R	Permanent droop
r	Temporary droop
T_r	Governor time constant
T_f	Filter time constant
T_g	Servo time constant
MXGTOR	Maximum gate opening rate
MXGTCR	Maximum gate closing rate
MXBGOR	Maximum buffered gate opening rate
MXBGCR	Maximum buffered gate closing opening
GMAX	Maximum gate limit
GMIN	Minimum gate limit
RVLVCR	Relief valve closing rate
RVLMAX	Maximum relief valve limit
MXJDOR	Maximum jet deflector opening rate
MXJDCR	Maximum jet deflector closing rate

Hydro Turbine Governor Traveling Wave Model

Governor TGOV4

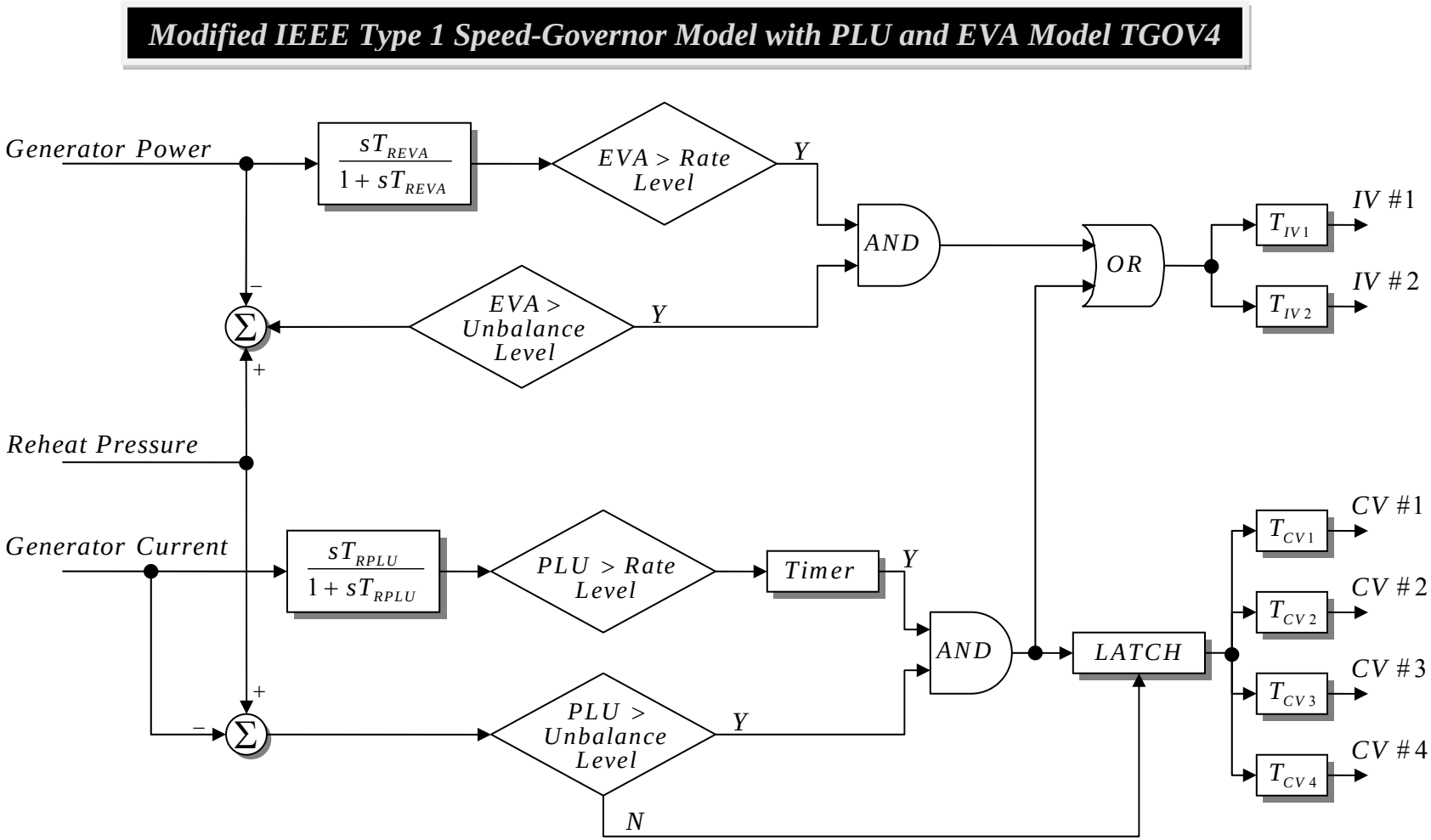

1 2 3 4 5 6

PLU and EVA Logic Diagram

Governor TWDM1T

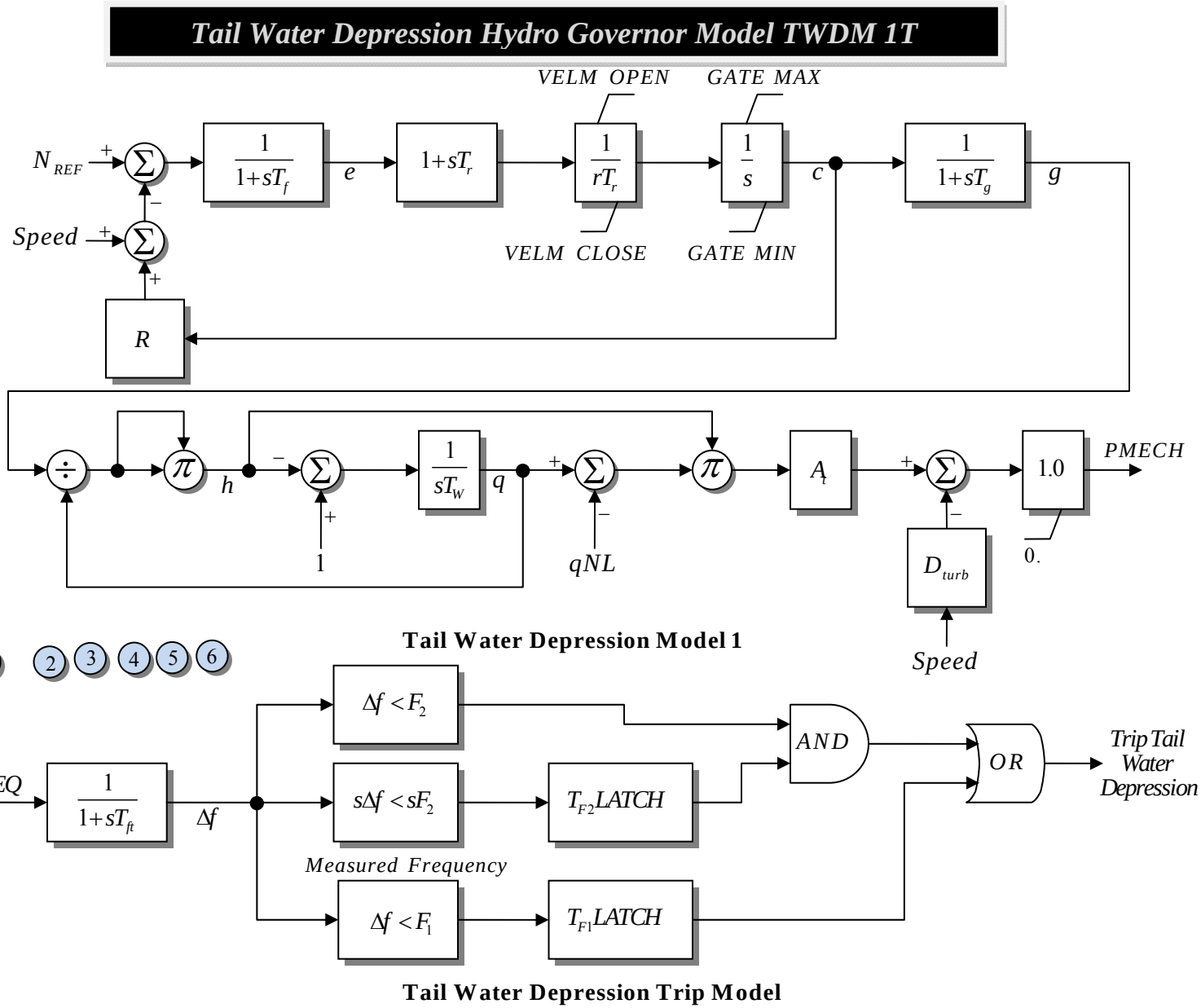

Governor TWDM2T

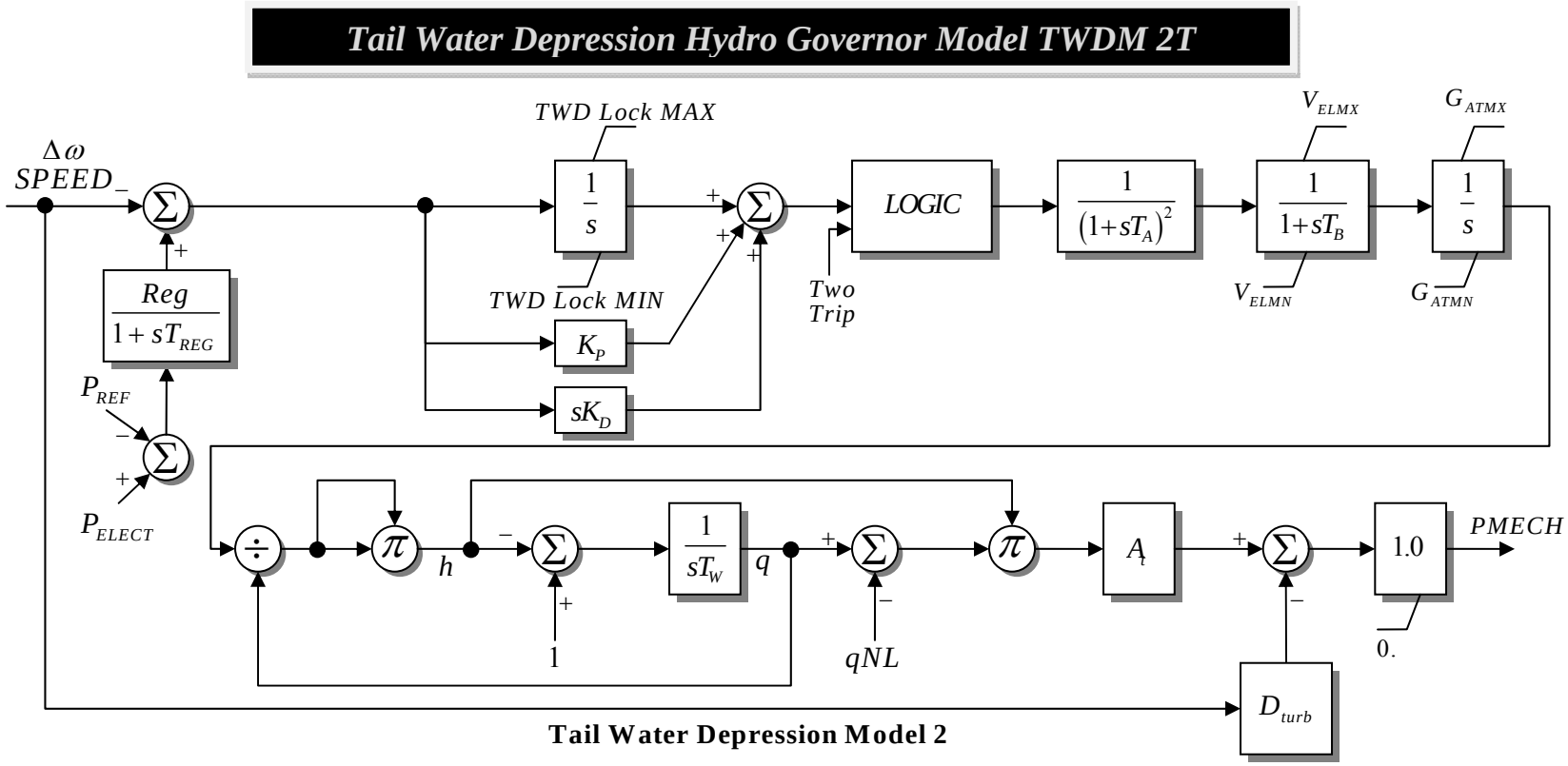

Tail Water Depression Model 2

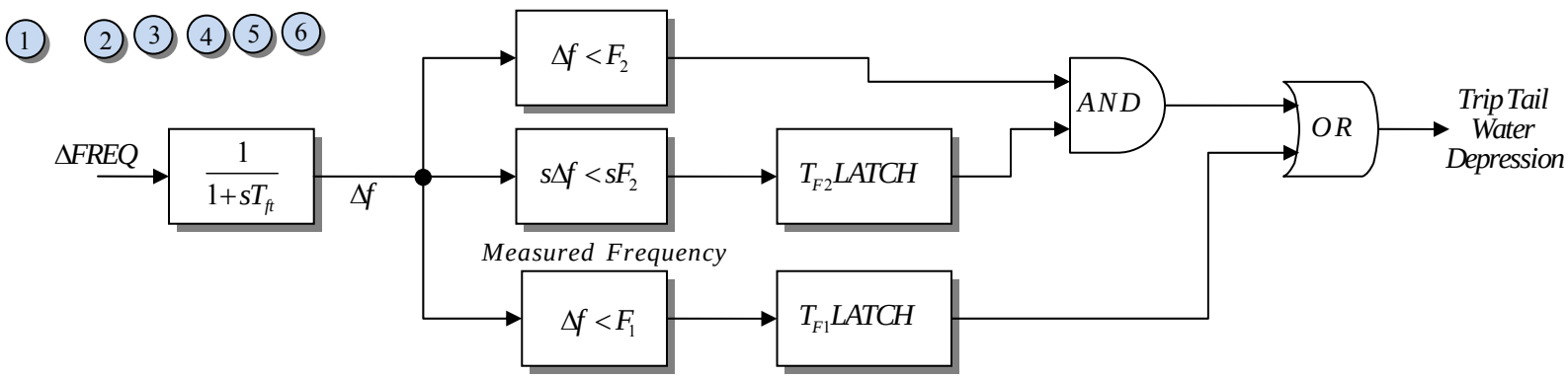

Tail Water Depression Trip Model

HVDC
Two Terminal DC Control Diagram

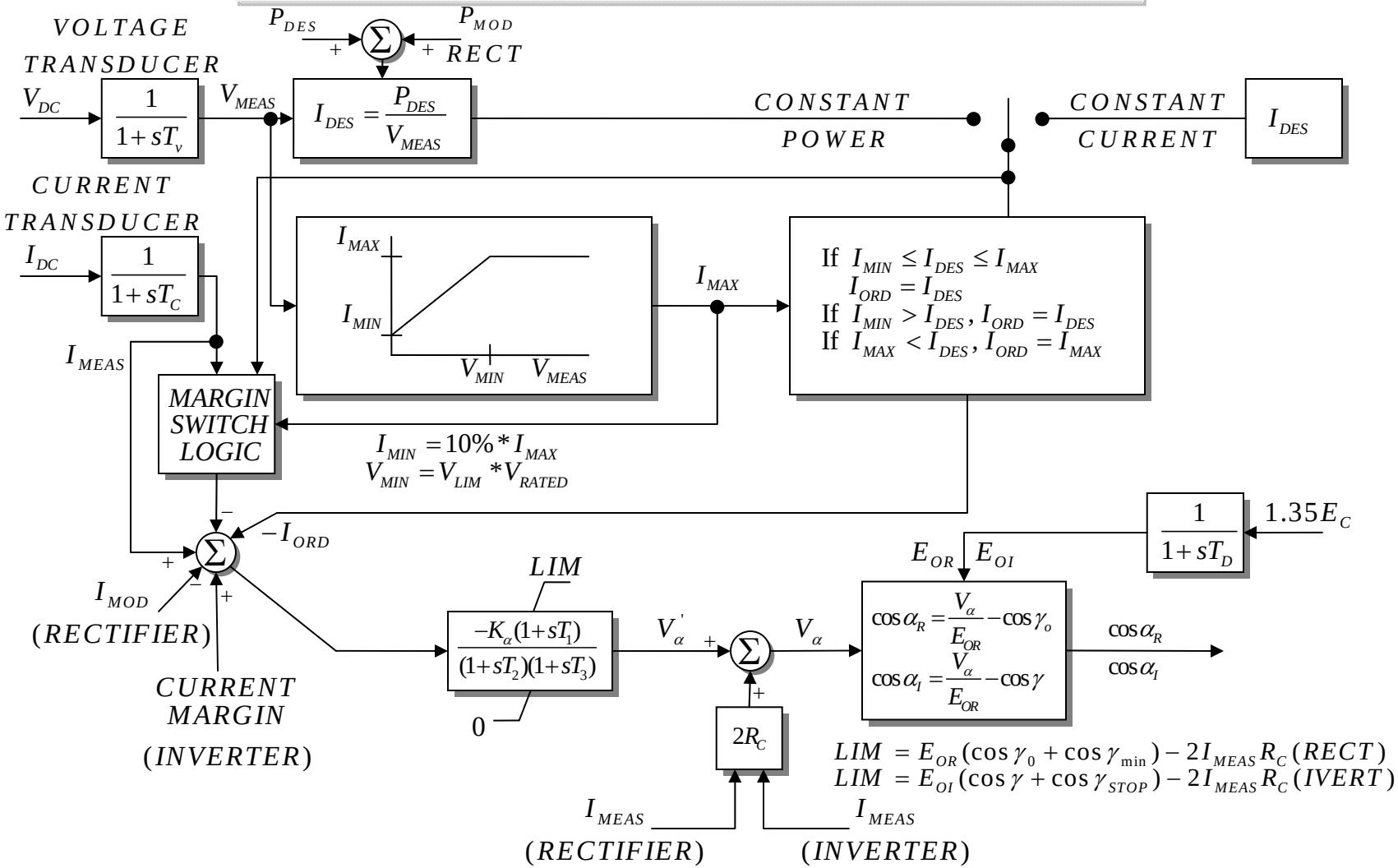

Model in the public domain, available from BPA

HVDC
WSCC Stability Program Two-Terminal DC Line Model

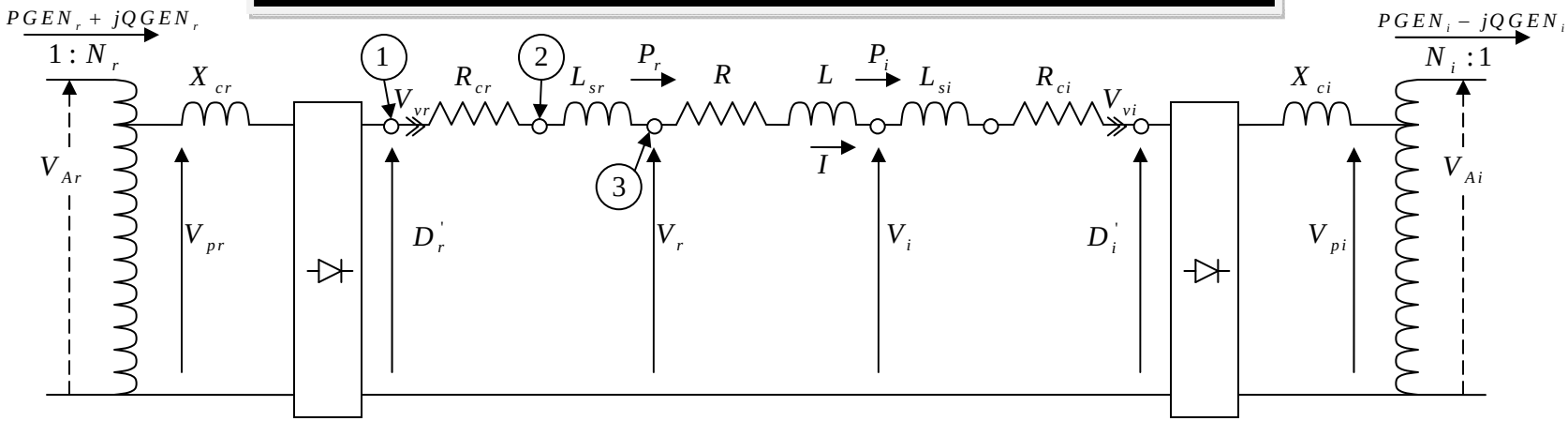

$$E_r = \frac{3\sqrt{2}}{\pi} N_r V_{AR} = \frac{3\sqrt{2}}{\pi} V_{pr} \qquad \cos\gamma_r = \frac{IX_{cr}}{\sqrt{2}V_{pr}} - \cos\theta_r \qquad E_i = \frac{3\sqrt{2}}{\pi} N_i V_{Ai} = \frac{3\sqrt{2}}{\pi} V_{pi} \qquad \cos\beta_i = \cos\theta_i - \frac{IX_{ci}}{\sqrt{2}V_{pi}}$$

$$D'_r = E_r \cos\alpha - \frac{3I}{\pi} X_{cr} \qquad \mathrm{PGEN}_r = D'_r I \qquad D'_i = E_i \cos\alpha - \frac{3I}{\pi} X_{ci} \qquad \mathrm{PGEN}_i = D'_i I$$

$$\cos\theta_r = \frac{D'_r}{E_r} \qquad \cos\theta_i = \frac{D'_i}{E_i}$$

$$I'' = (E_r \cos\alpha_{MIN} - E_i \cos\gamma_{MIN} - V_{vr} - V_{vi}) / R_{TOT}$$

$$I''' = (E_r \cos\alpha_{MIN} + E_i \cos\gamma_{STOP} - V_{vr} - V_{vi}) / R_{TOT}$$

$$\text{WHERE } R_{TOT} = R + R_{cr} + R_{ci} + \frac{3}{\pi}(X_{cr} - X_{ci})$$

Model in the public domain, available from BPA

HVDC-MTDC Control System for Rectifiers and Inverters without Current Margin

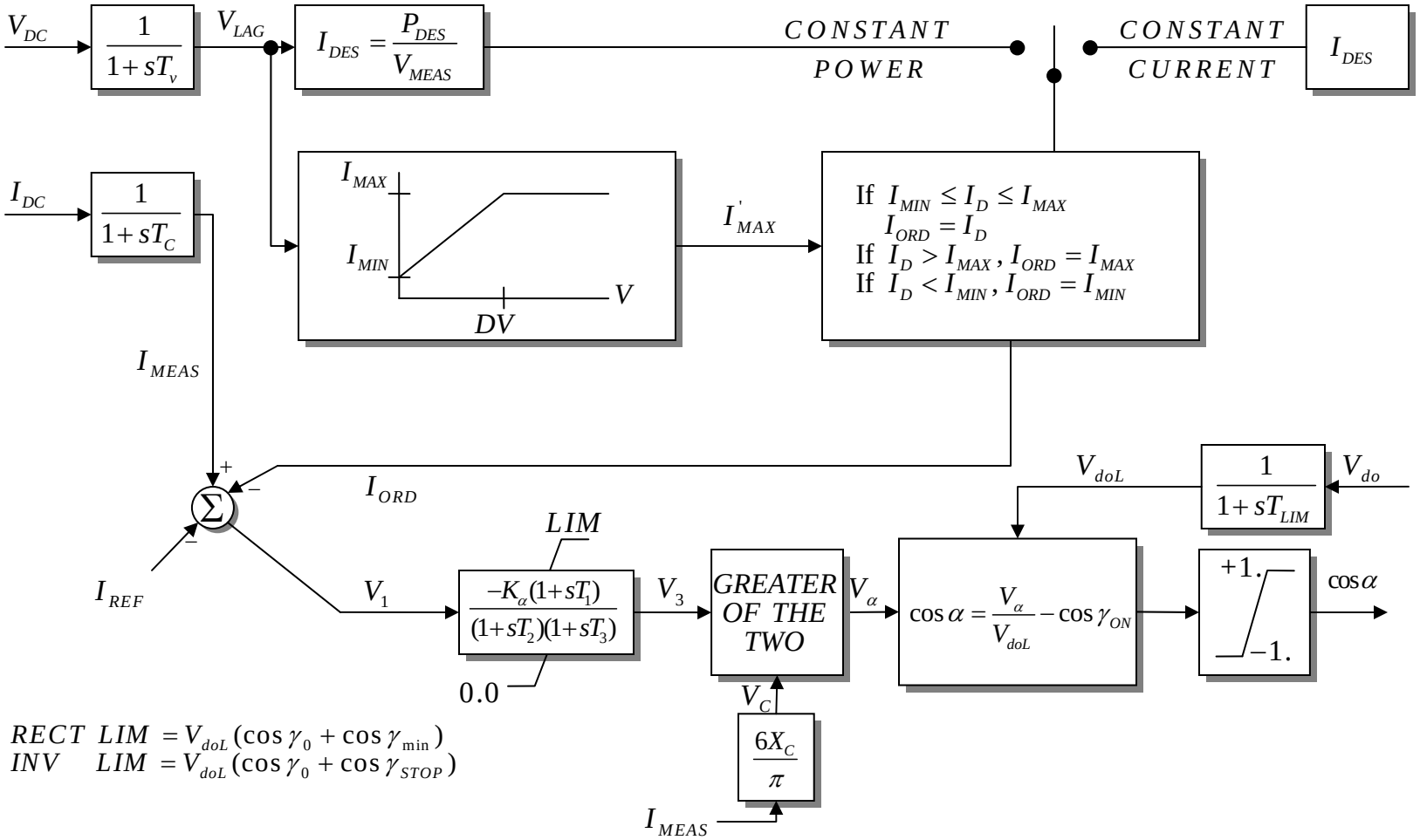

$$RECT\ \ LIM = V_{doL}(\cos\gamma_0 + \cos\gamma_{\min})$$
$$INV\ \ LIM = V_{doL}(\cos\gamma_0 + \cos\gamma_{STOP})$$

Model in the public domain, available from BPA

HVDC-MTDC Control System for Terminals with Current Margin

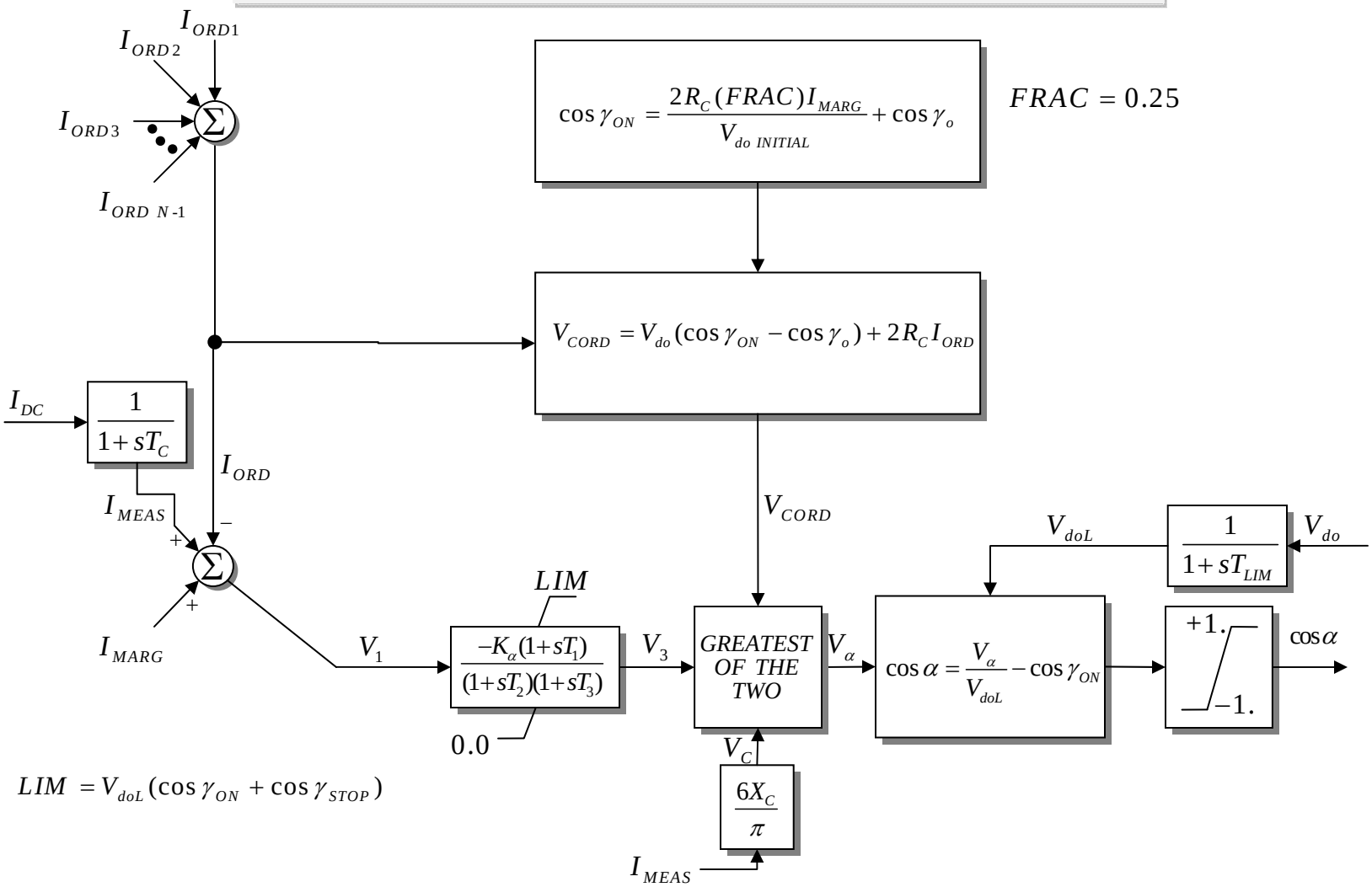

Model in the public domain, available from BPA

HVDC
Detailed VDCL and Mode Change Card Multi-Terminal

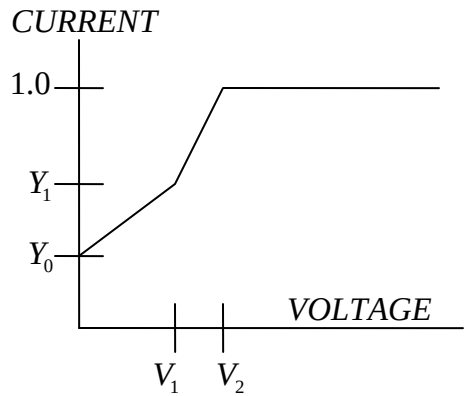

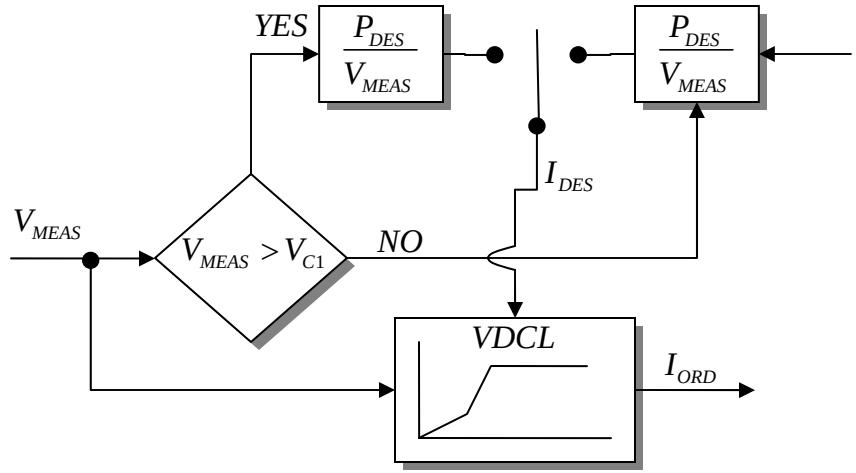

VDCL

Y_1, Y_0 PU Current on rated Current base

V_1, V_2 PU Voltage on rated Voltage base

Mode Change

V_{C1} PU rated DC Voltage below which mode is changed to constant I from constant P

Model in the public domain, available from BPA

HVDC
Equivalent Circuit of a Two Terminal DC Line

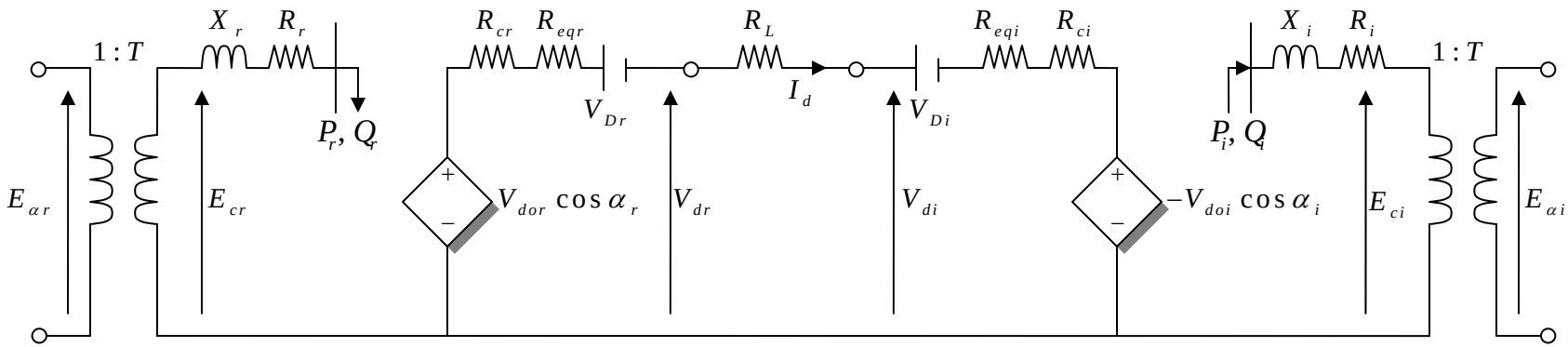

Model in the public domain, available from BPA

HVDC
BPA Converter Controller

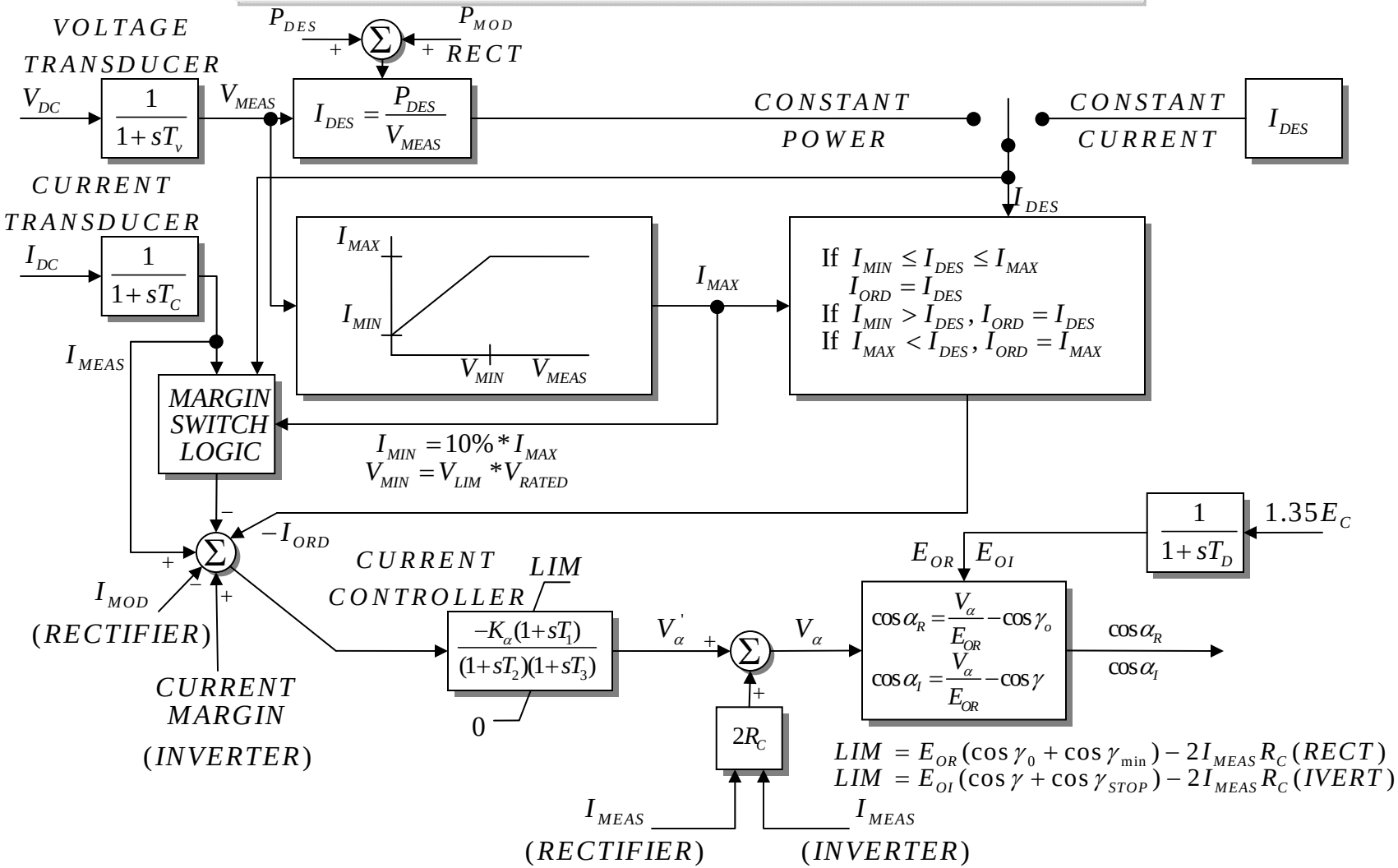

Model in the public domain, available from BPA

HVDC
BPA Block Diagram of Simplified Model

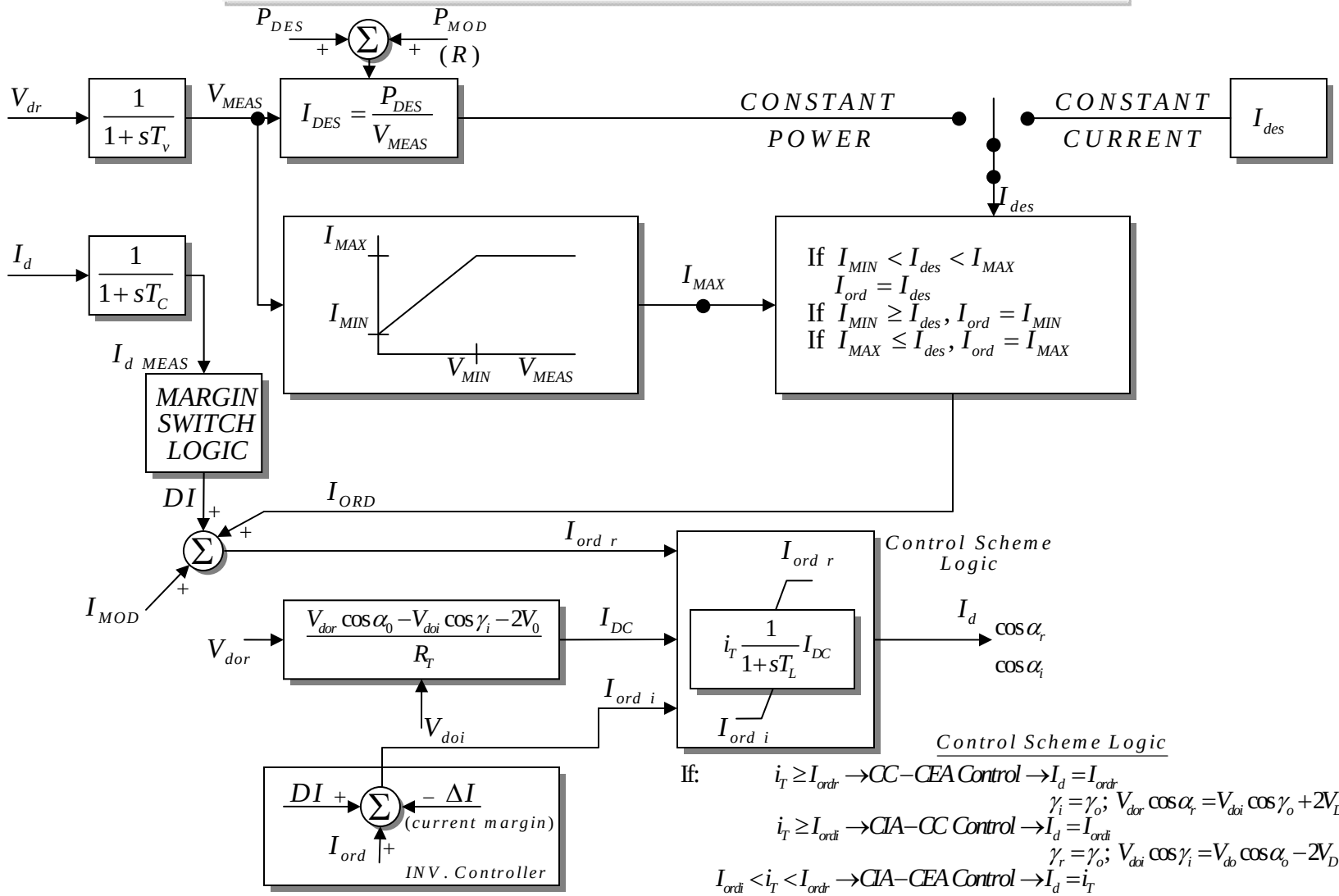

Control Scheme Logic

If:

$i_T \geq I_{ordr} \rightarrow CC-CEA\ Control \rightarrow I_d = I_{ordr}$

$\gamma_i = \gamma_o;\ V_{dor}\cos\alpha_r = V_{doi}\cos\gamma_o + 2V_D + R_T I_D$

$i_T \geq I_{ordi} \rightarrow CIA-CC\ Control \rightarrow I_d = I_{ordi}$

$\gamma_r = \gamma_o;\ V_{doi}\cos\gamma_i = V_{do}\cos\alpha_o - 2V_D - R_T I_D$

$I_{ordi} < i_T < I_{ordr} \rightarrow CIA-CEA\ Control \rightarrow I_d = i_T$

$\alpha_r = \alpha_o;\ \gamma_i = \gamma_o$

Model in the public domain, available from BPA

HVDC
BPA Block Diagram of Simplified Model

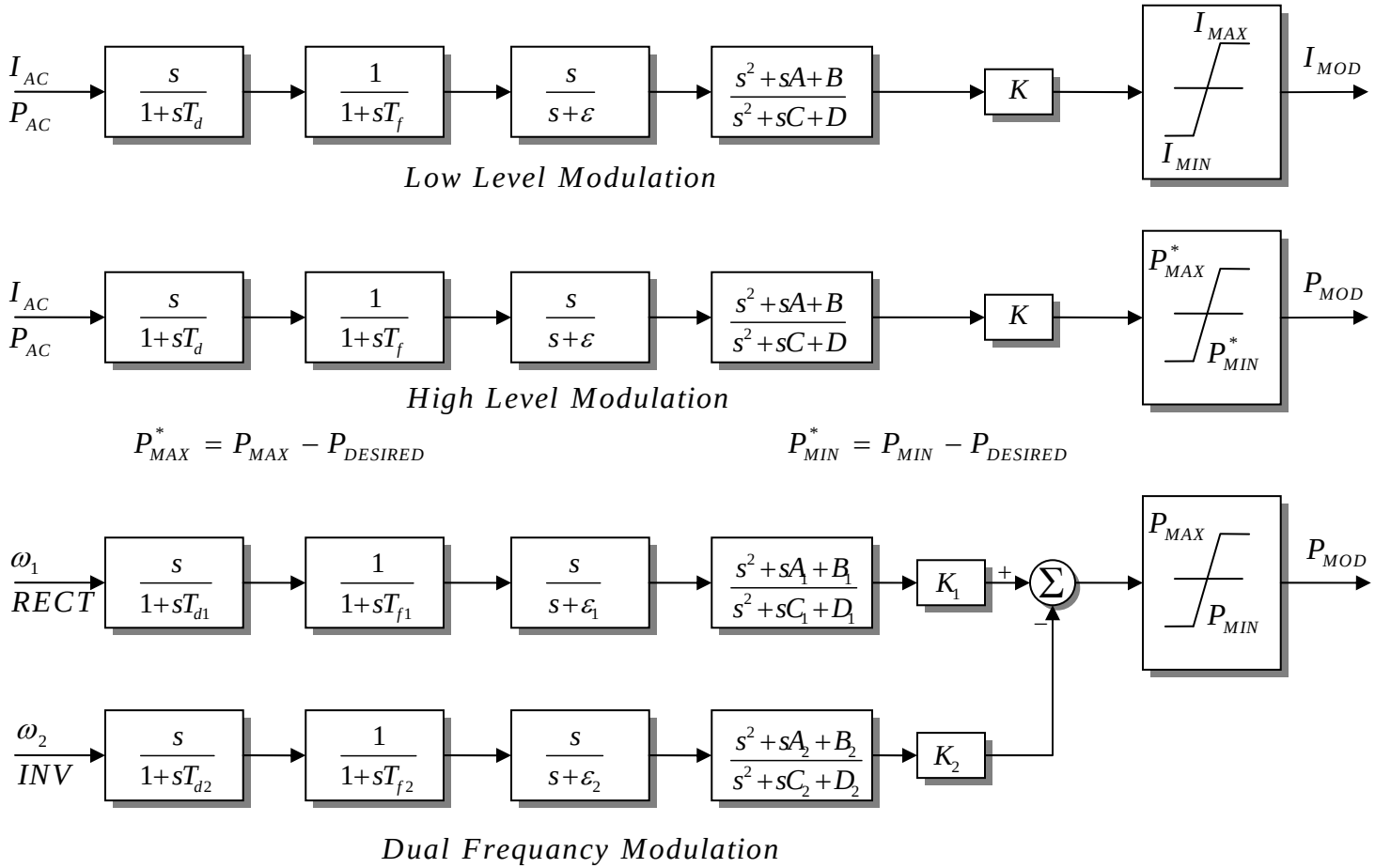

$$P^*_{MAX} = P_{MAX} - P_{DESIRED} \qquad P^*_{MIN} = P_{MIN} - P_{DESIRED}$$

Model in the public domain, available from BPA

HVDC
BPA Block Diagram of Simplified Model

Gamma Modulation

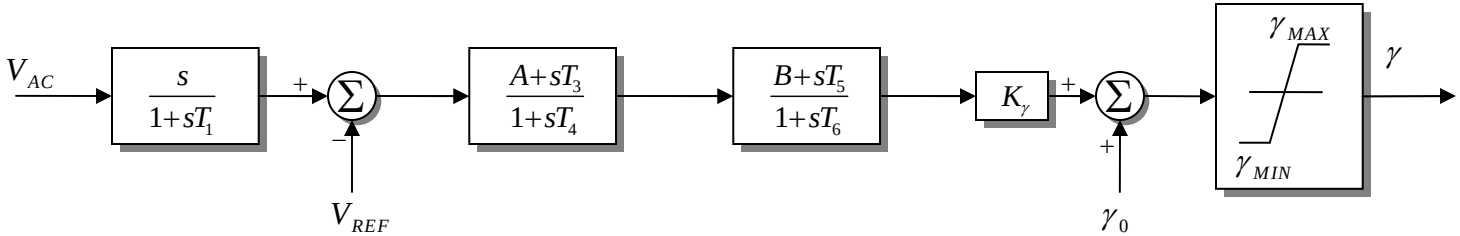

T_1, T_3, T_4, T_5 are in secs.
γ_{MAX}, γ_{MIN} are in degrees
HILO must be 5

K_γ is in degrees/pu volts
A, B must be 1 or zero

Model in the public domain, available from BPA

Load Characteristic CIM5

Load Characteristic CIM5
Induction Motor Load Model

Type 1

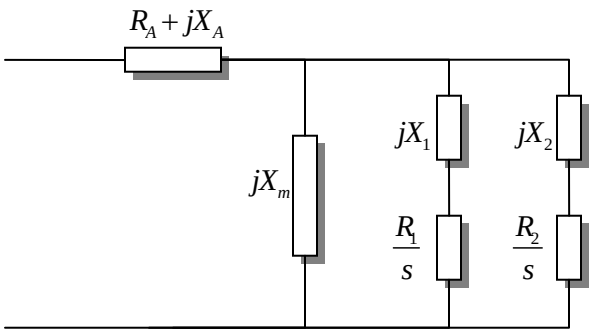

Type 2

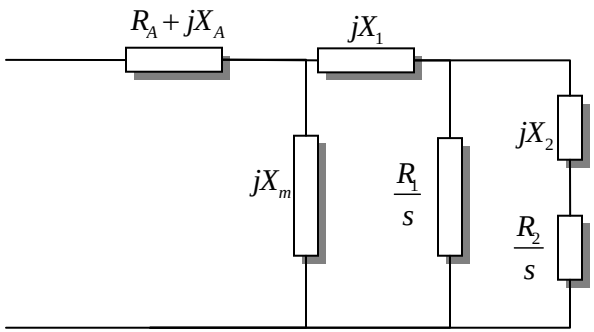

Impedances on Motor MVA Base

Model Notes:

1. To model single cage motor: set $R_2 = X_2 = 0$.
2. When MBASE = 0.; motor MVA base = PMULT*MW load. When MBASE > 0.; motor MVA base = MBASE
3. Load Torque, $T_L = T(1+D_\omega)^D$
4. For motor starting, $T=T_{nom}$ is specified by the user in CON(J+18). For motor online studies, $T=T_0$ is calculated in the code during initialization and stored in VAR(L+4).
5. V_l is the per unit voltage level below which the relay to trip the motor will begin timing. To display relay, set $V_l=0$
6. T_l is the time in cycles for which the voltage must remain below the threshold for the relay to trip. T_B is the breaker delay time cycles.

Model supported by PSSE

Load Characteristic CIM6

Load Characteristic CIM6
Induction Motor Load Model

Type 1

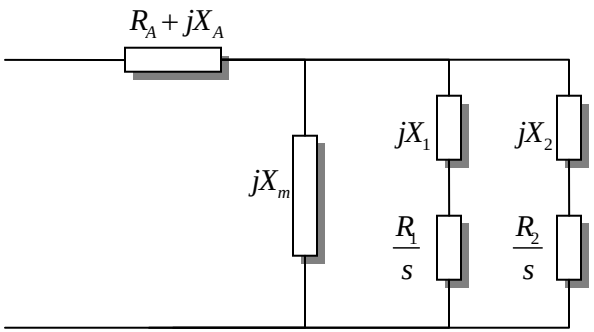

Type 2

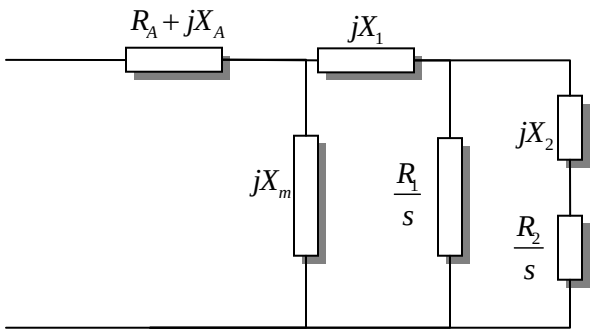

Impedances on Motor MVA Base

Model Notes:

1. To model single cage motor: set $R_2 = X_2 = 0$.
2. When MBASE = 0.; motor MVA base = PMULT*MW load. When MBASE > 0.; motor MVA base = MBASE
3. Load Torque, $T_L = T\left(A_\omega^2 + B_\omega + C_0 + D_\omega^E\right)^D$
4. For motor starting, $T=T_{nom}$ is specified by the user in CON(J+22). For motor online studies, $T=T_0$ is calculated in the code during initialization and stored in VAR(L+4).
5. V_l is the per unit voltage level below which the relay to trip the motor will begin timing. To display relay, set $V_l=0$
6. T_l is the time in cycles for which the voltage must remain below the threshold for the relay to trip. T_B is the breaker delay time cycles.

Model supported by PSSE

Load Characteristic CIMW

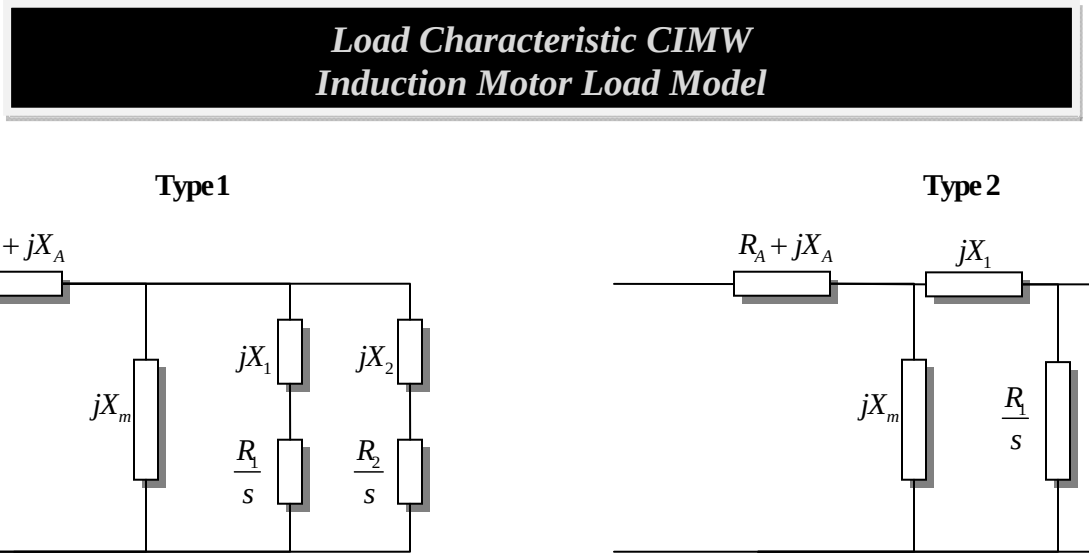

Impedances on Motor MVA Base

Model Notes:

1. To model single cage motor: set $R_2 = X_2 = 0$.
2. When MBASE = 0.; motor MVA base = PMULT*MW load. When MBASE > 0.; motor MVA base = MBASE
3. Load Torque, $T_L = T\left(A_\omega^2 + B_\omega + C_0 + D_\omega^E\right)^D$ where $C0 = 1 - A_\omega^2 - B_{\omega_0} - D_{\omega_0}^E$.
4. This model cannot be used formotor starting studies. T_0 is calculated in the code during initialization and stored in VAR(L+4).
5. V_l is the per unit voltage level below which the relay to trip the motor will begin timing. To display relay, set V_l=0
6. T_l is the time in cycles for which the voltage must remain below the threshold for the relay to trip. T_B is the breaker delay time cycles.

Model supported by PSSE

Load Characteristic CLOD

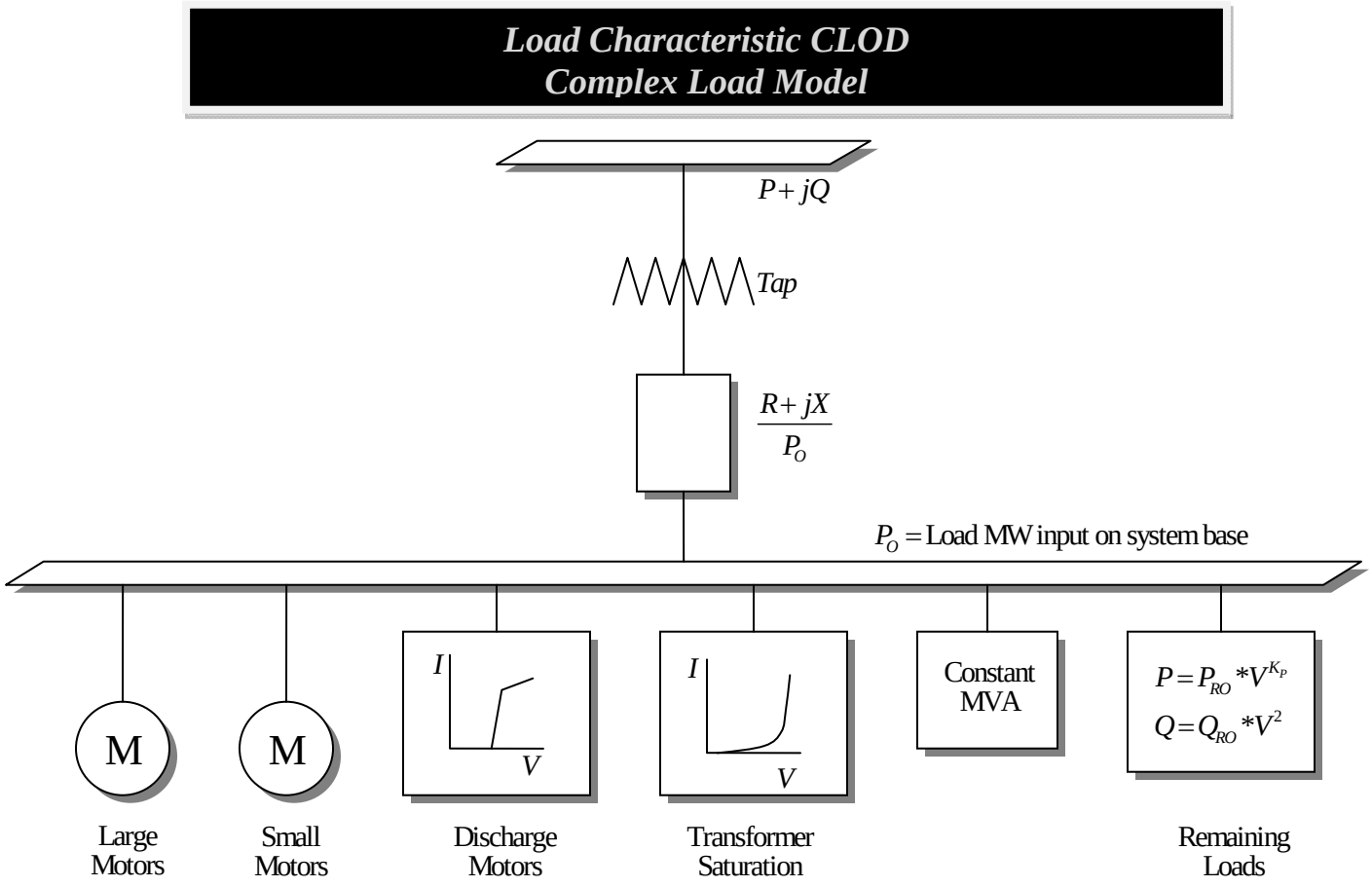

Model supported by PSSE

Load Characteristic EXTL

Load Characteristic EXTL
Complex Load Model

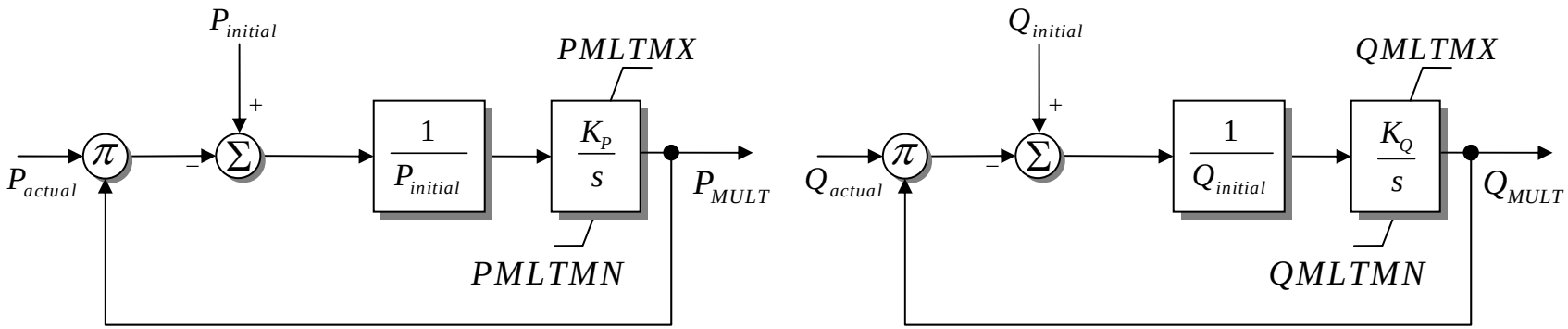

Load Characteristic IEEL

Load Characteristic IEEL
Complex Load Model

$$P = P_{load}\left(a_1 v^{n_1} + a_2 v^{n_2} + a_3 v^{n_3}\right)\left(1 + a_7 \Delta f\right)$$

$$Q = Q_{load}\left(a_4 v^{n_4} + a_5 v^{n_5} + a_6 v^{n_6}\right)\left(1 + a_8 \Delta f\right)$$

Model supported by PSSE

Load Characteristic LDFR

Load Characteristic LDFR
Complex Load Model

$$P = P_O \left(\frac{\omega}{\omega_O} \right)^m$$

$$Q = Q_O \left(\frac{\omega}{\omega_O} \right)^n$$

$$I_p = I_{po} \left(\frac{\omega}{\omega_O} \right)^r$$

$$I_q = I_{qo} \left(\frac{\omega}{\omega_O} \right)^s$$

Model supported by PSSE

Load Characteristic BPA INDUCTION MOTOR I

Load Characteristic BPA Induction MotorI
Induction Motor Load Model

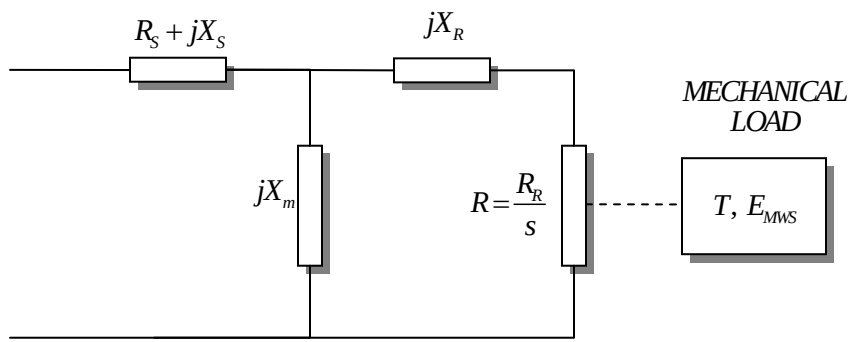

Model Notes:

Mechanical Load Torque, $T = (A\omega^2 + B\omega + C)T_O$

where C is calculated by the program such that

$$A\omega^2 + B\omega + C = 1.0$$

$$\omega = 1 - \omega$$

Model in the public domain, available from BPA

Load Characteristic BPA TYPE LA

Load Characteristic BPA Type LA
Load Model

$$P = P_0\left(P_1 V^2 + P_2 V + P_3 + P_4\left(1 + \Delta f * L_{DP}\right)\right)$$

Model in the public domain, available from BPA

Load Characteristic BPA TYPE LB

Load Characteristic BPA Type LB
Load Model

$$P = P_0\left(P_1V^2 + P_2V + P_3\right)\left(1 + \Delta f * L_{DP}\right)$$

Model in the public domain, available from BPA

Stabilizer BPA SF, BPA SP, BPA SS, and BPA SG

Stabilizer BPA SF, BPA SP, BPA SS, and BPA SG
Stabilizer Models

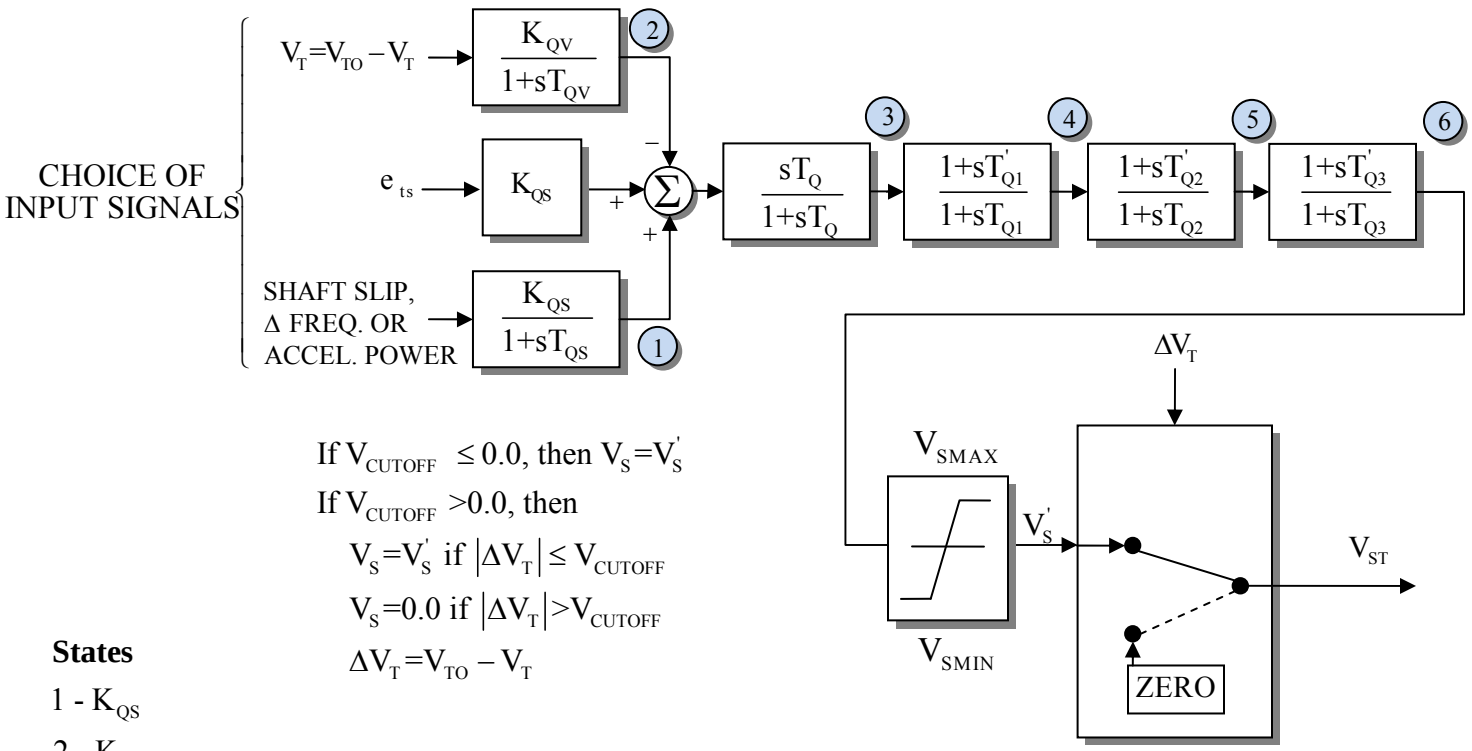

If $V_{CUTOFF} \leq 0.0$, then $V_S = V'_S$

If $V_{CUTOFF} > 0.0$, then

$V_S = V'_S$ if $|\Delta V_T| \leq V_{CUTOFF}$

$V_S = 0.0$ if $|\Delta V_T| > V_{CUTOFF}$

$\Delta V_T = V_{TO} - V_T$

States

1 - K_{QS}

2 - K_{QV}

3 - T_Q

4 - T_{Q1}

5 - T_{Q2}

6 - T_{Q3}

Model in the public domain, available from BPA

Stabilizer BPA SH, BPA SHPLUS, and BPA SI

Stabilizer BPA SH, BPA SHPLUS, and BPA SI
Stabilizer Models

No block diagrams have been created

Stabilizer IEE2ST

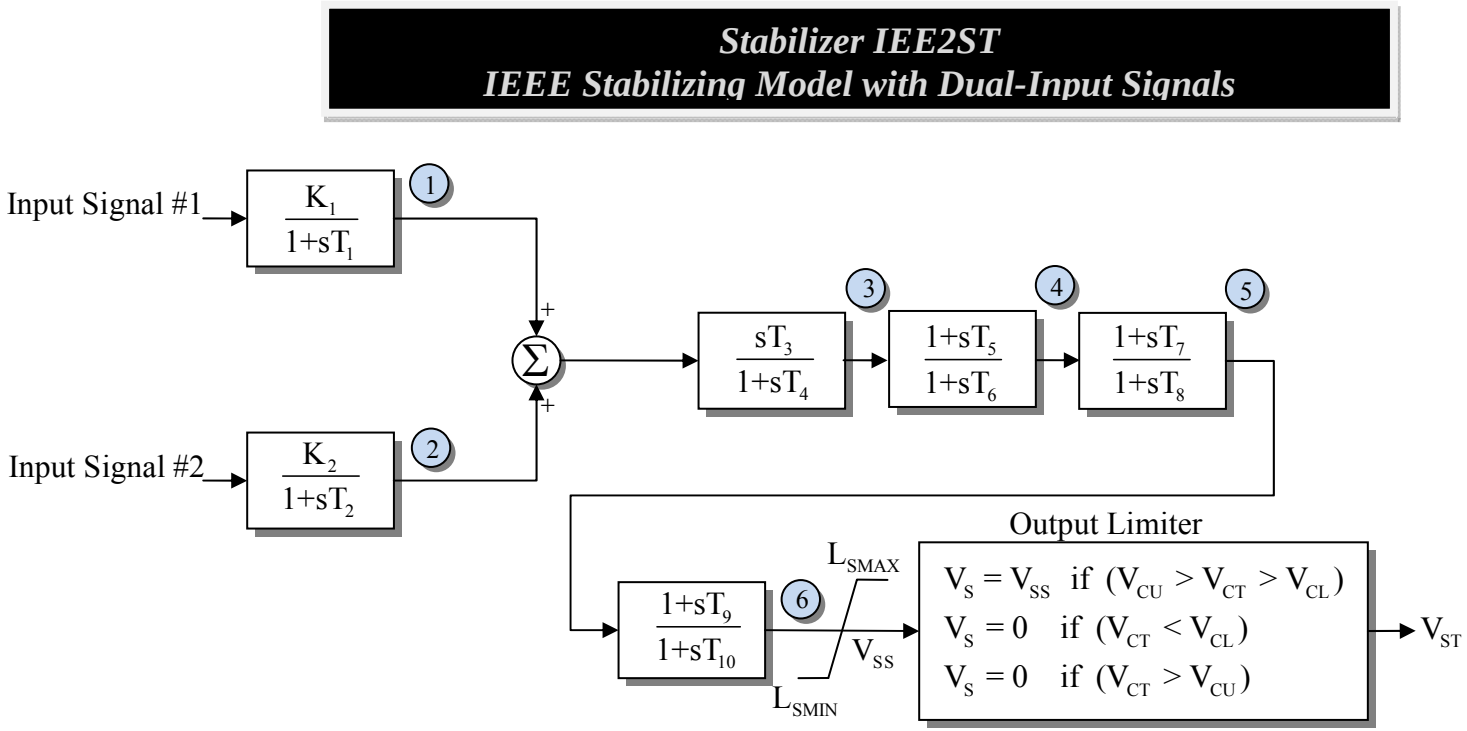

States

1 - Transducer1

2 - Transducer2

3 - Washout

4 - LL1

5 - LL2

6 - Unlimited Signal

Model supported by PSSE

Stabilizer IEEEST

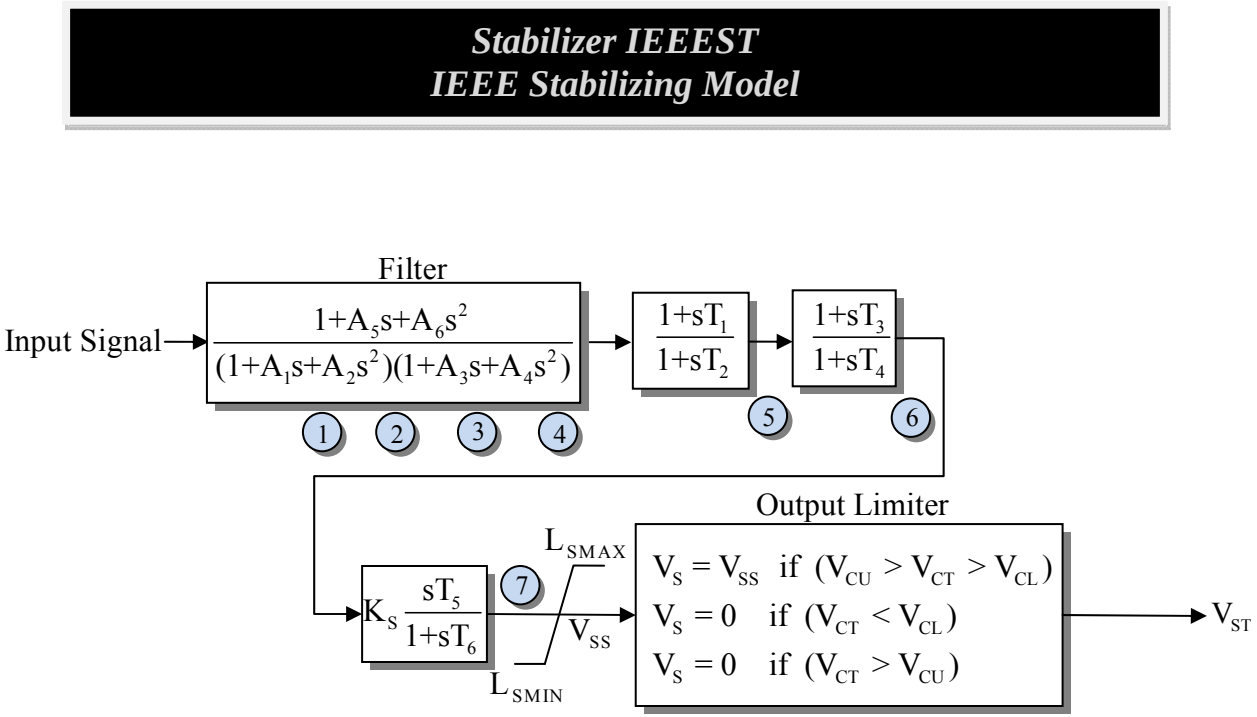

States

1 - Filter 1

2 - Filter 2

3 - Filter 3

4 - Filter Out

5 - LL1

6 - LL2

7 - Unlimited Signal

Model supported by PSLF with time delay that is not implemented in Simulator

Model supported by PSSE

Stabilizer PFQRG

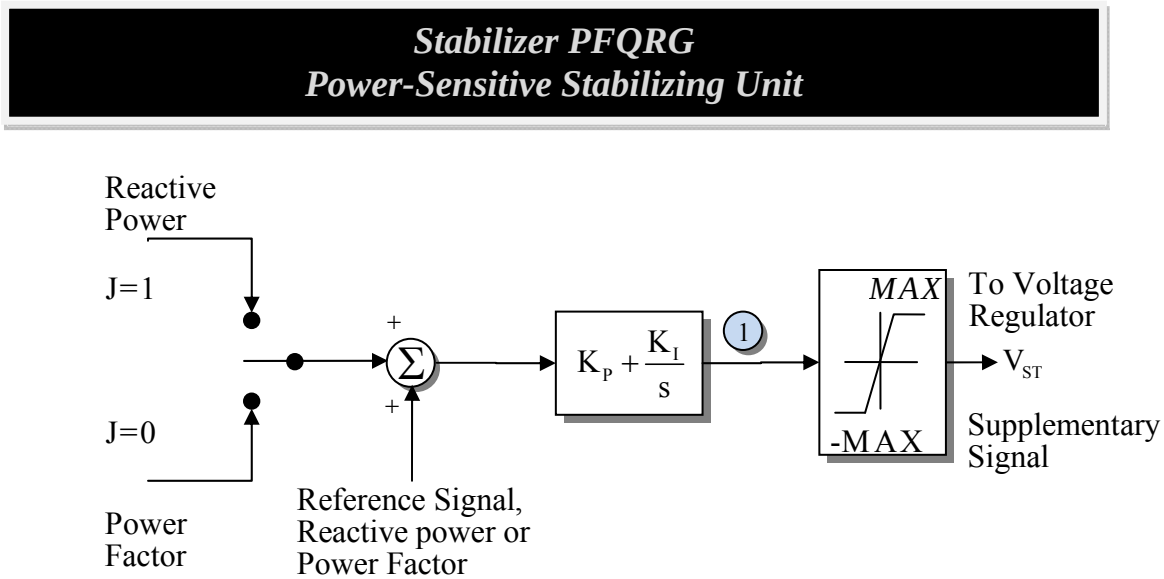

States

1 - PI

Model supported by PSLF

Stabilizer PSS2A

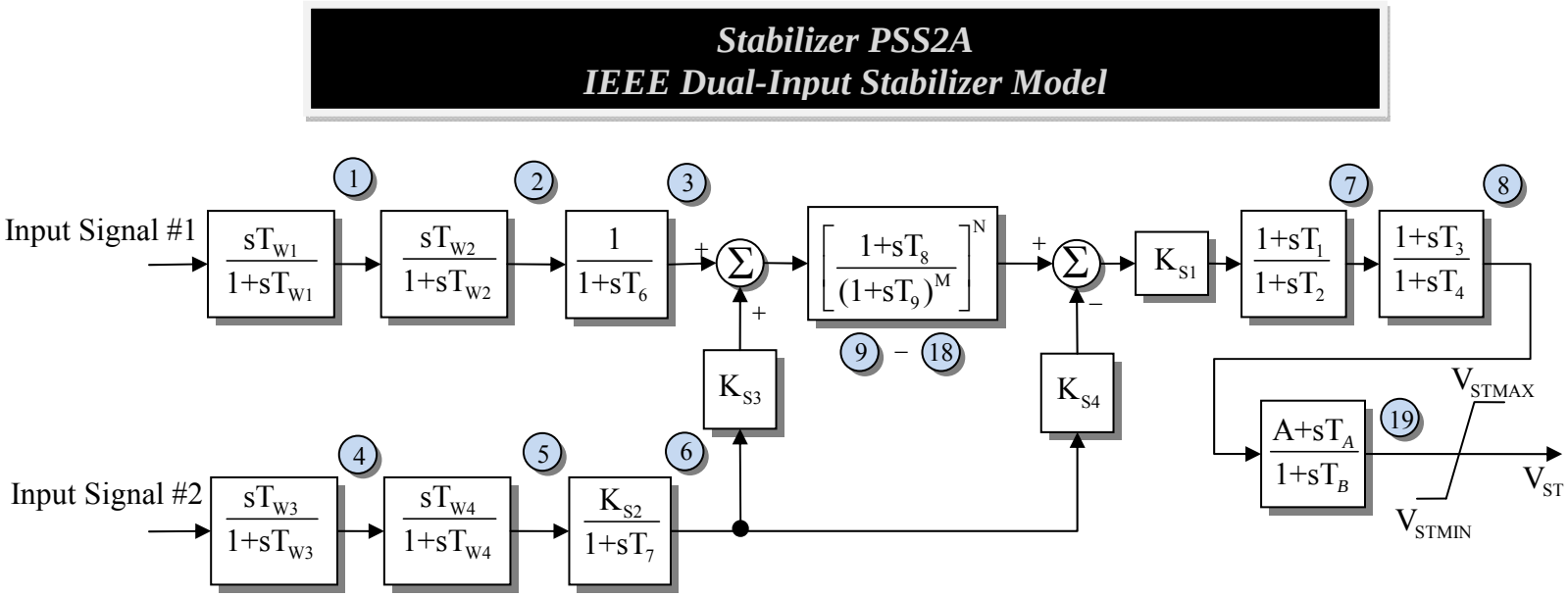

States

1 - WOTW1	11 - RampFilter3
2 - WOTW2	12 - RampFilter4
3 - Transducer1	13 - RampFilter5
4 - WOTW3	14 - RampFilter6
5 - WOTW4	15 - RampFilter7
6 - Transducer2	16 - RampFilter8
7 - LL1	17 - RampFilter9
8 - LL2	18 - RampFilter10
9 - RampFilter1	19 - LLGEOnly
10 - RampFilter2	

Model supported by PSLF

Model supported by PSSE without T_A, T_B lead/lag block and with $K_{S4} = 1$

Stabilizer PSS2B

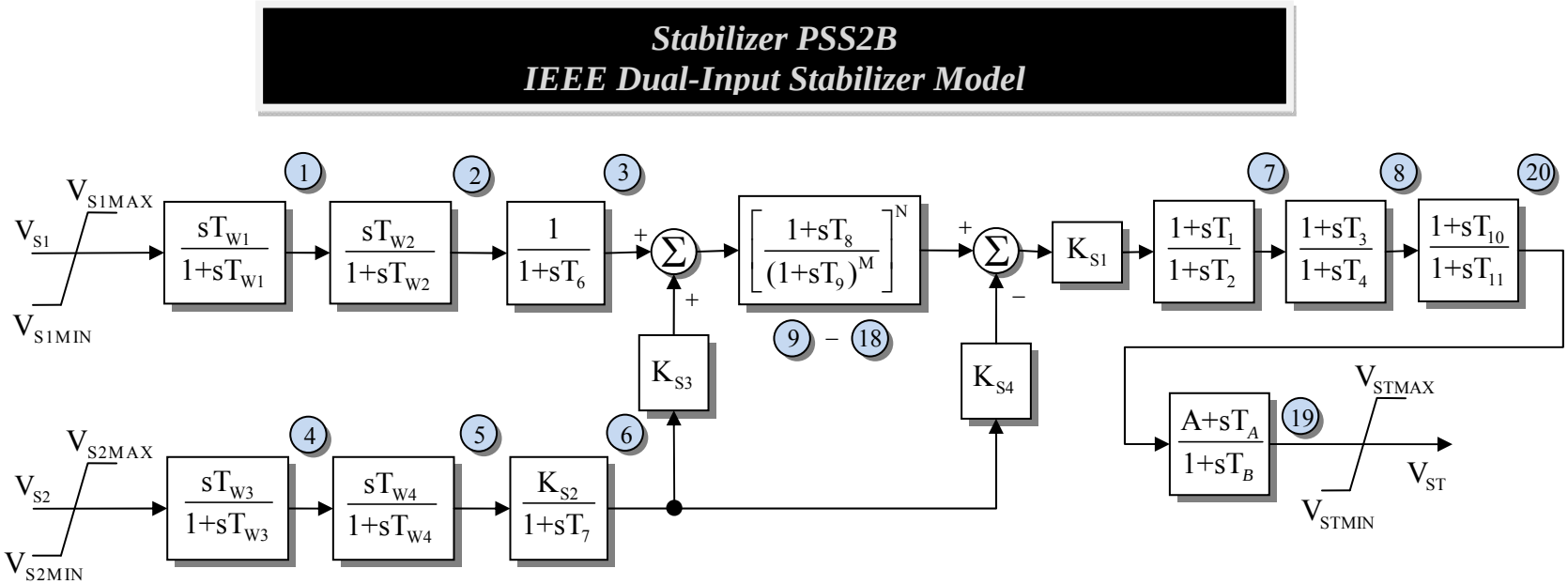

States

1 - WOTW1	11 - RampFilter3
2 - WOTW2	12 - RampFilter4
3 - Transducer1	13 - RampFilter5
4 - WOTW3	14 - RampFilter6
5 - WOTW4	15 - RampFilter7
6 - Transducer2	16 - RampFilter8
7 - LL1	17 - RampFilter9
8 - LL2	18 - RampFilter10
9 - RampFilter1	19 - LLGEOnly
10 - RampFilter2	20 - LL3

Model supported by PSLF

Model supported by PSSE without T_A, T_B lead/lag block and with $K_{S4} = 1$

Stabilizer PSSSB

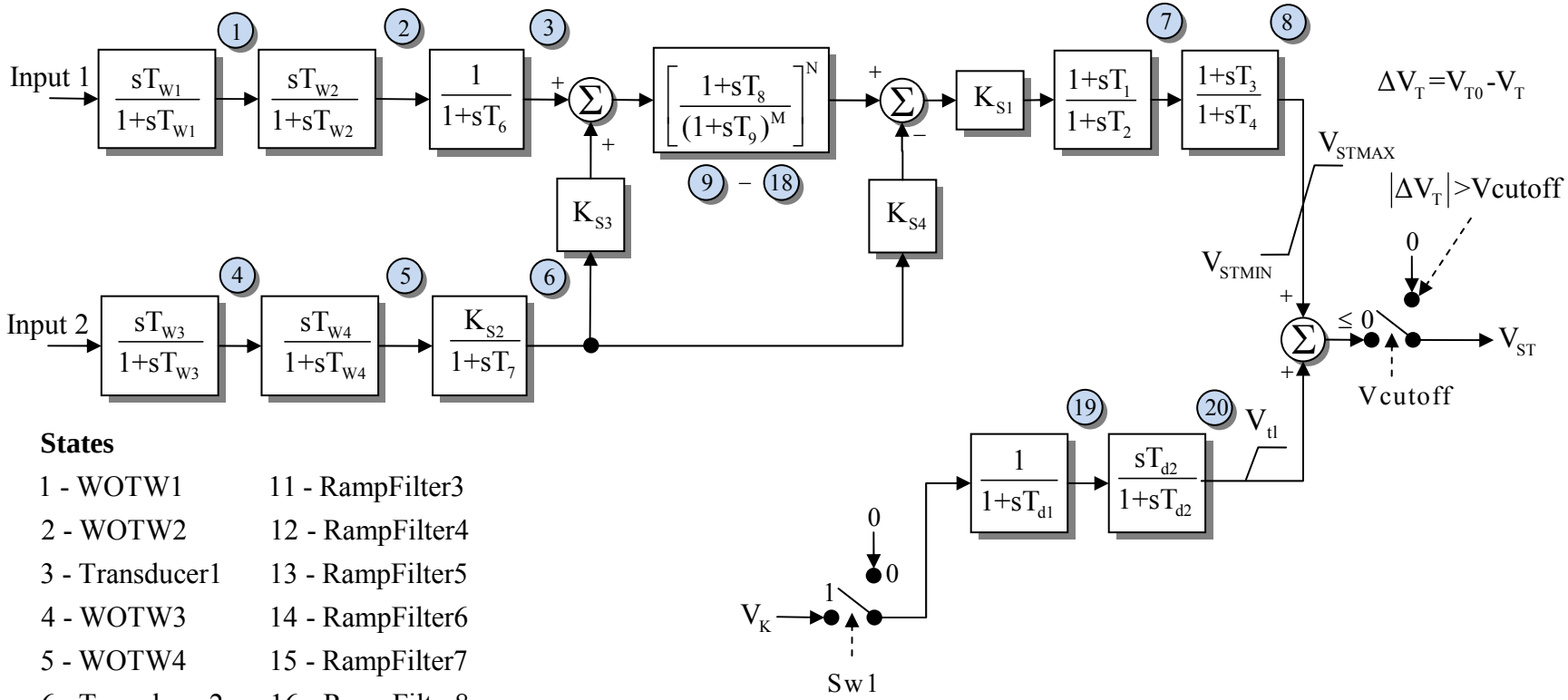

States

1 - WOTW1	11 - RampFilter3
2 - WOTW2	12 - RampFilter4
3 - Transducer1	13 - RampFilter5
4 - WOTW3	14 - RampFilter6
5 - WOTW4	15 - RampFilter7
6 - Transducer2	16 - RampFilter8
7 - LL1	17 - RampFilter9
8 - LL2	18 - RampFilter10
9 - RampFilter1	19 - TransducerTEB
10 - RampFilter2	20 - WOTEB

Model supported by PSLF

Stabilizer PTIST1

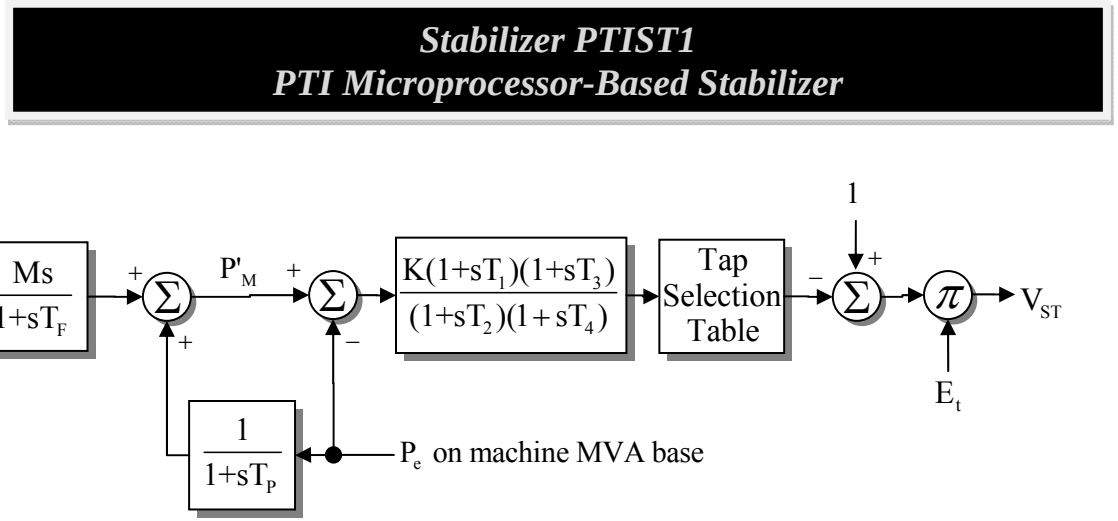

Model supported by PSSE but not yet implemented in Simulator

Stabilizer PTIST3

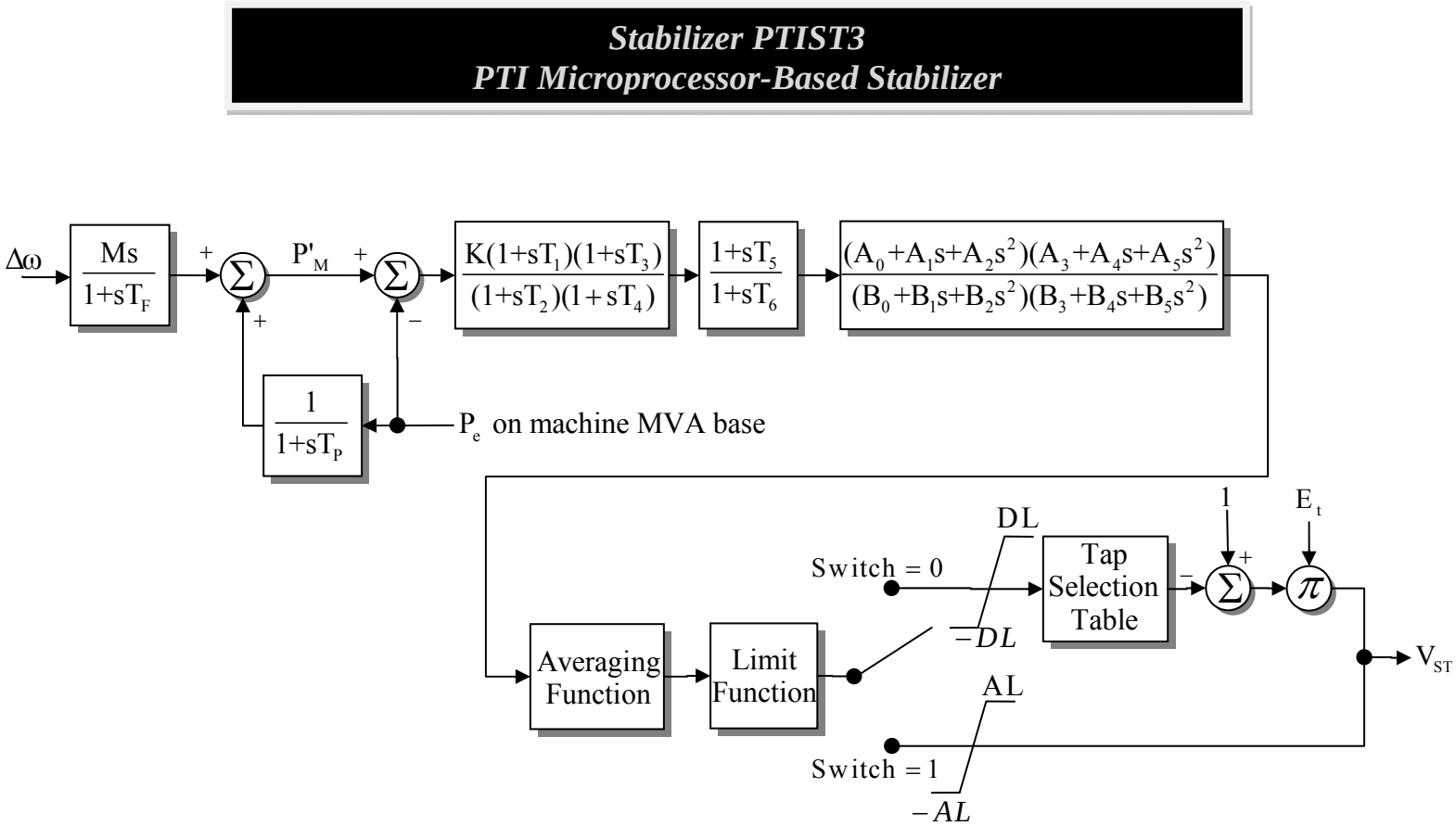

Model supported by PSSE but not yet implemented in Simulator

Stabilizer ST2CUT

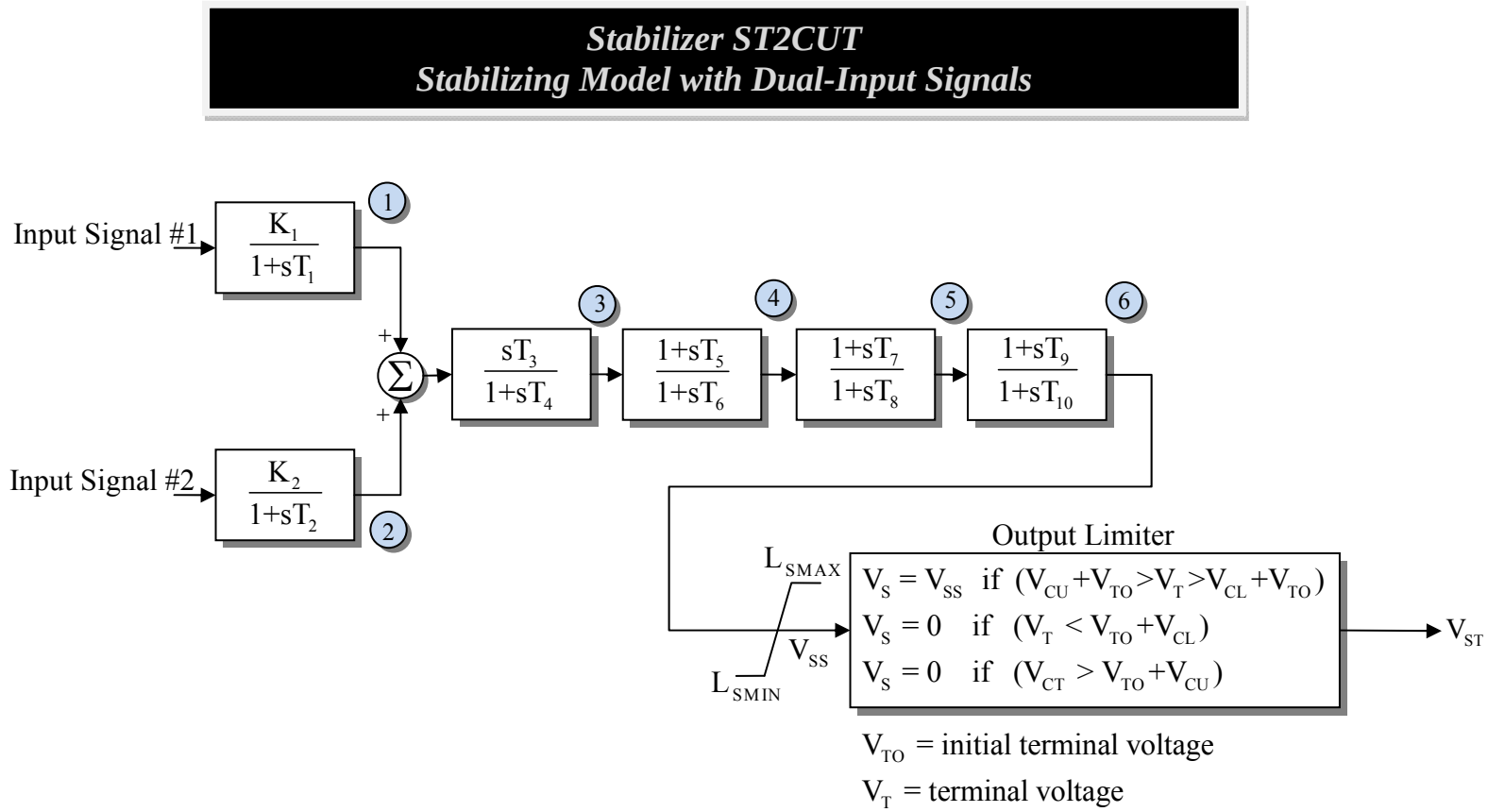

States

1 - Transducer1

2 - Transducer2

3 - Washout

4 - LL1

5 - LL2

6 - Unlimited Signal

Model supported by PSSE

Stabilizer STAB1

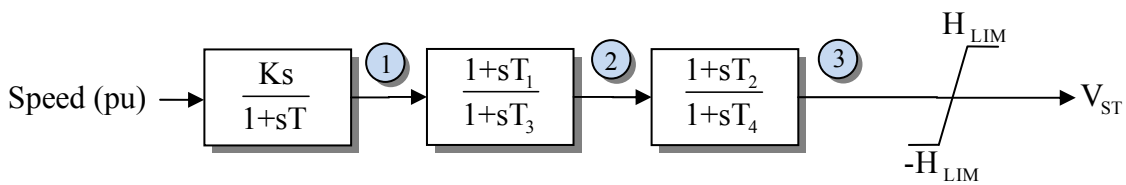

States

1 - Washout

2 - Lead-lag 1

3 - Lead-lag 2

Model supported by PSSE

Stabilizer STAB2A

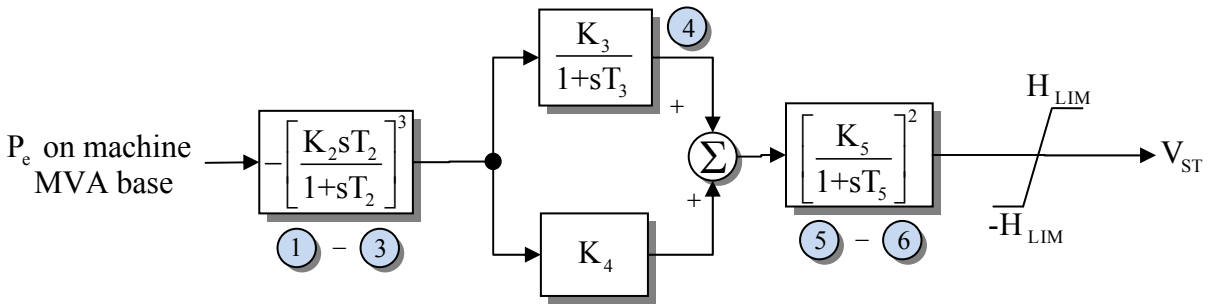

States

1 - Input State 1

2 - Input State 2

3 - Input State 3

4 - T_3

5 - Output State 1

6 - Output State 2

Model supported by PSSE

Stabilizer STAB3

Stabilizer STAB3
Power-Sensitive Stabilizing Unit

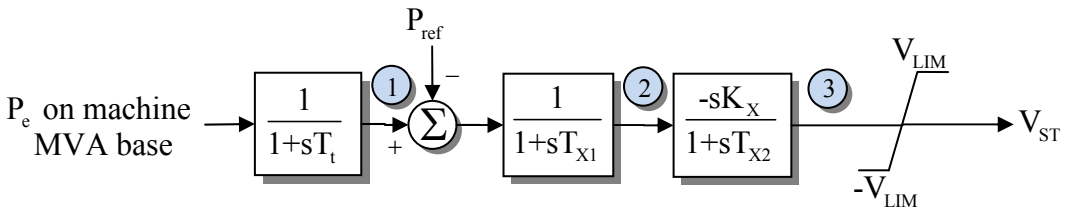

States

1 - Int T_t

2 - Int T_{X1}

3 - Unlimited Signal

Model supported by PSSE

Stabilizer STAB4

Stabilizer STAB4
Power-Sensitive Stabilizer

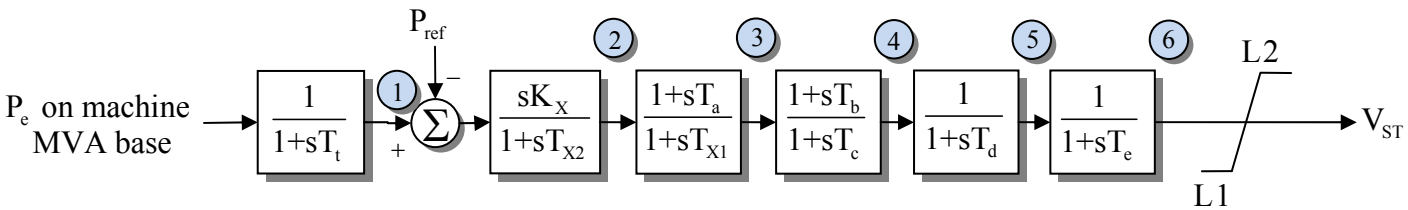

States

1 - Input

2 - Reset

3 - LL1

4 - LL2

5 - T_d

6 - Unlimited Signal

Model supported by PSSE

Stabilizer STBSVC

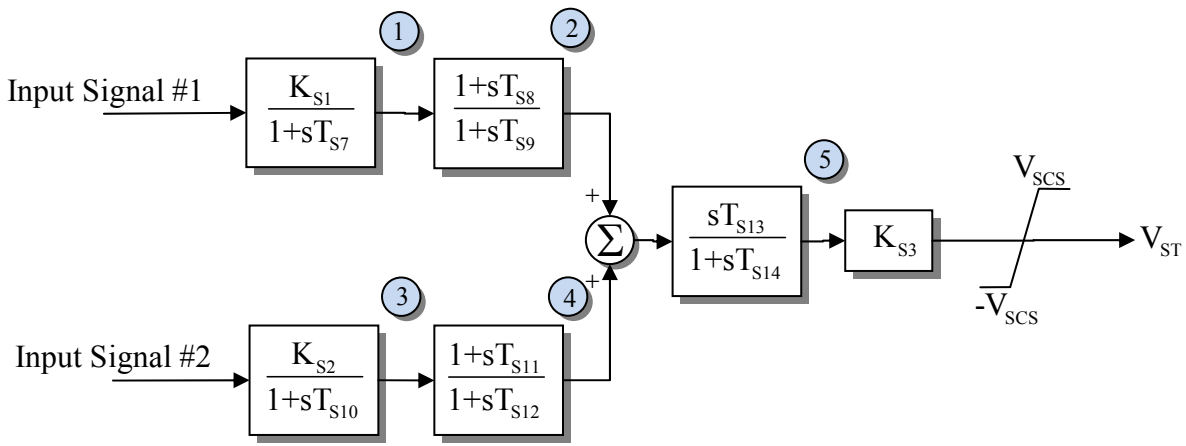

States

1 - Transducer1

2 - LL1

3 - Transducer2

4 - LL2

5 - Washout

Model supported by PSSE

Stabilizer WSCCST

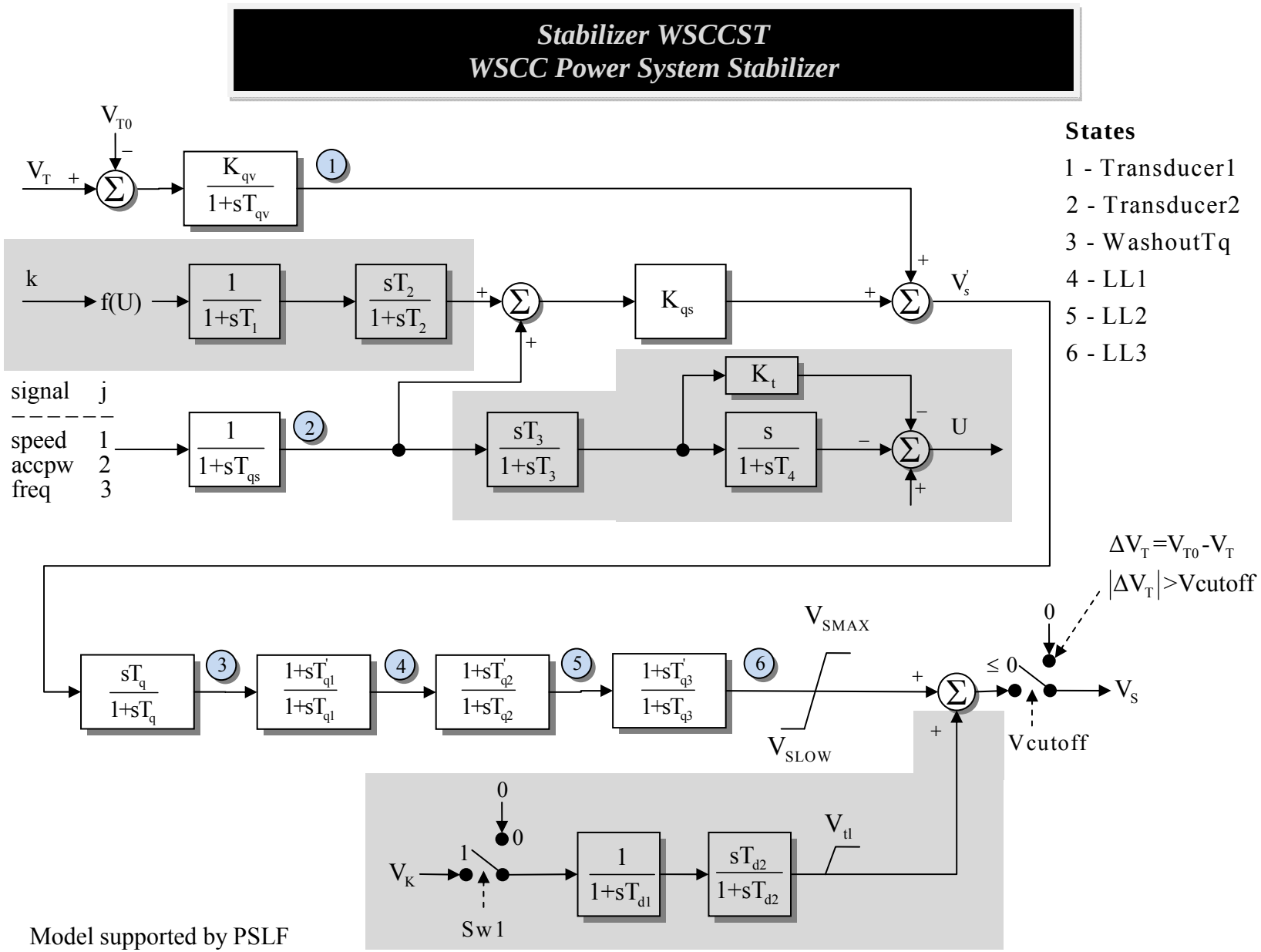

Model supported by PSLF

Blocks in gray have not been implemented in Simulator

Stabilizer WT12A1 and WT1P

Stabilizer WT12A1 and WT1P
Pseudo Governor Model for Type 1 and Type 2 Wind Turbines

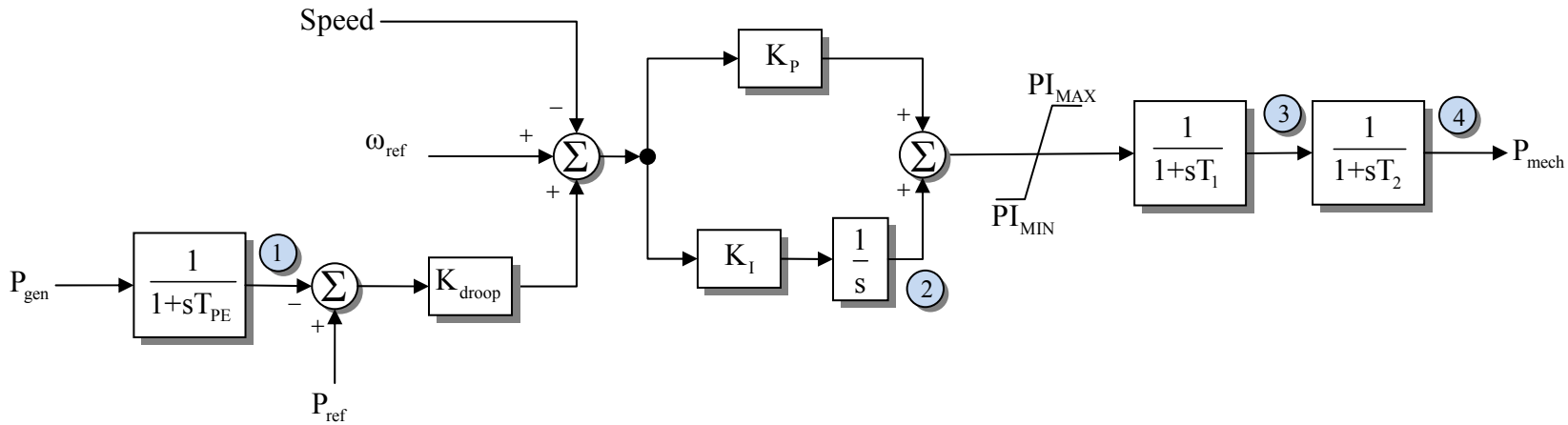

States

1 - P_{gen}

2 - K_I

3 - T_1

4 - P_{mech}

WT12A1 supported by PSSE with $K_I = \frac{1}{T_I}$

WT1P supported by PSLF

Stabilizer WT3P and WT3P1

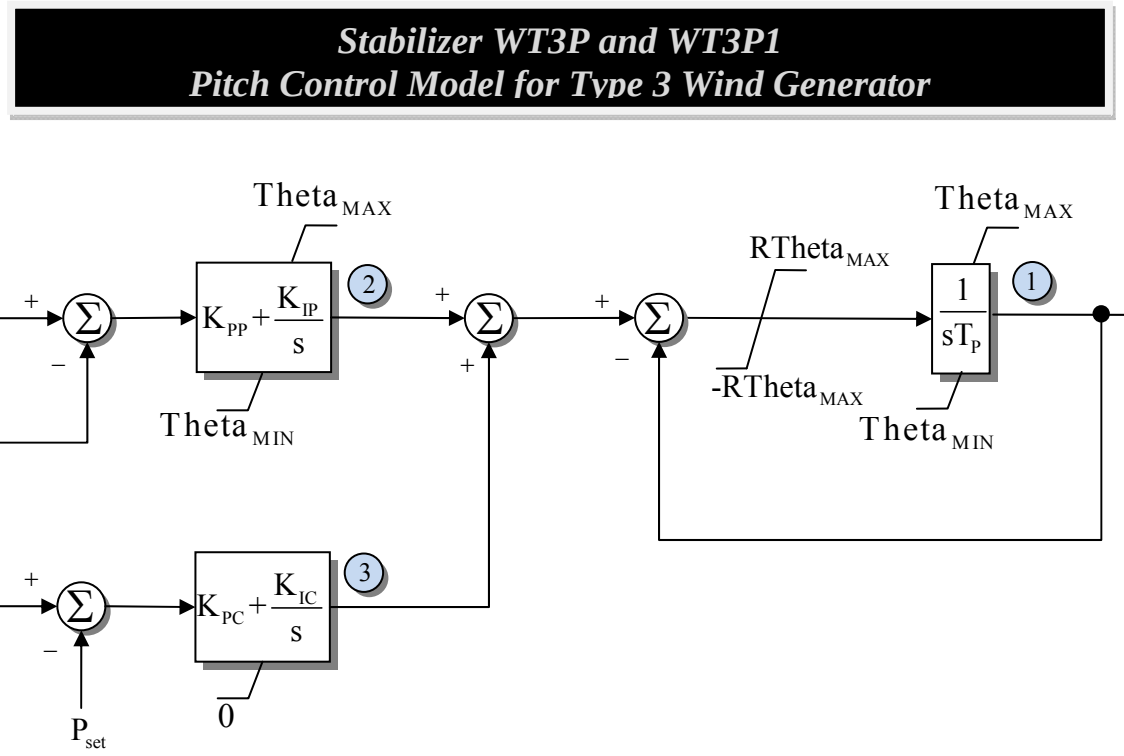

States

1 - Pitch

2 - PitchControl

3 - PitchComp

WT3P supported by PSLF

$T_P = T_{PI}$, $Theta_{MAX} = PI_{MAX}$, $Theta_{MIN} = PI_{MIN}$, and $RTheta_{MAX} = PI_{RATE}$

WT3P1 supported by PSSE with no non-windup limits on pitch control