NERC TPL-001:
“N-1-1” Contingency Analysis

2010 PowerWorld Client Conference
June 24, 2010
Portland Oregon

PowerWorld Corporation

NERC Standard TPL-001-1

- Part of NERC Project 2006-02
  - Assess Transmission Future Needs and Develop Transmission Plans
  - http://www.nerc.com/filez/standards/Assess-Transmission-Future-Needs.html
- Would require Transmission Planners and Planning Coordinators to prepare an annual Planning Assessment of its portion of the Bulk Electric System
- Would require study and documentation of several classes of contingencies
- March 2010 ballot was not approved and will proceed to recirculation ballot

TPL-001-1 Event Categories

- P0: No Contingency, Normal System
- P1, P2: Single-Element Contingency
- P3: Generator Outage, followed by System Adjustments, followed by loss of another single element
- P4, P5: Multiple-Element Contingency
- P6: Transmission Outage, followed by System Adjustments, followed by loss of another single element
- P7: Multiple-Element Contingency (Common Structure)

Definitions

- **Base Case:** The power system in its normal steady-state, operation, with all elements in service that are expected to be in service.
- **Primary Contingency:** An loss of one or more system elements that occurs first. A Primary Contingency may be a planned or unplanned event.
- **Secondary Contingency:** An contingency that occurs after the Primary Contingency. This is usually an unplanned event.

System Adjustments

- TPL-001-1 allows “planned System adjustments such as Transmission configuration changes and re-dispatch of generation… if such adjustments are executable within the time duration applicable to the Facility Ratings”
- Interruption of Firm Transmission Service and Loss of Non-Consequential Load are allowed for some events
- System Adjustments are sometimes termed Remedial Action Schemes (RAS) or Special Protection Schemes (SPS)

Definitions

- **N-1-1 Contingency**: A sequence of events consisting of the initial loss of a single generator or transmission component (Primary Contingency), followed by system adjustments, followed by another loss of a single generator or transmission component (Secondary Contingency).
- **Model Criteria**: An evaluation of system conditions in Simulator, that if met, would cause a conditional system adjustment to occur.

“N-1-1” Contingencies

- TPL-001-1 category P3 and P6 outages could be classified “N-1-1” contingencies
  - A system element is forced out of service
  - Adjustments are made if necessary for security of the N-1 condition
  - A second system element is forced out of service

PowerWorld Simulator Contingency Modeling

- Many combinations of actions and elements, e.g.
  - Open a line
  - Change generator output
  - Partially curtail a load
- Unconditional or conditional actions, which occur only when specified system criteria are met

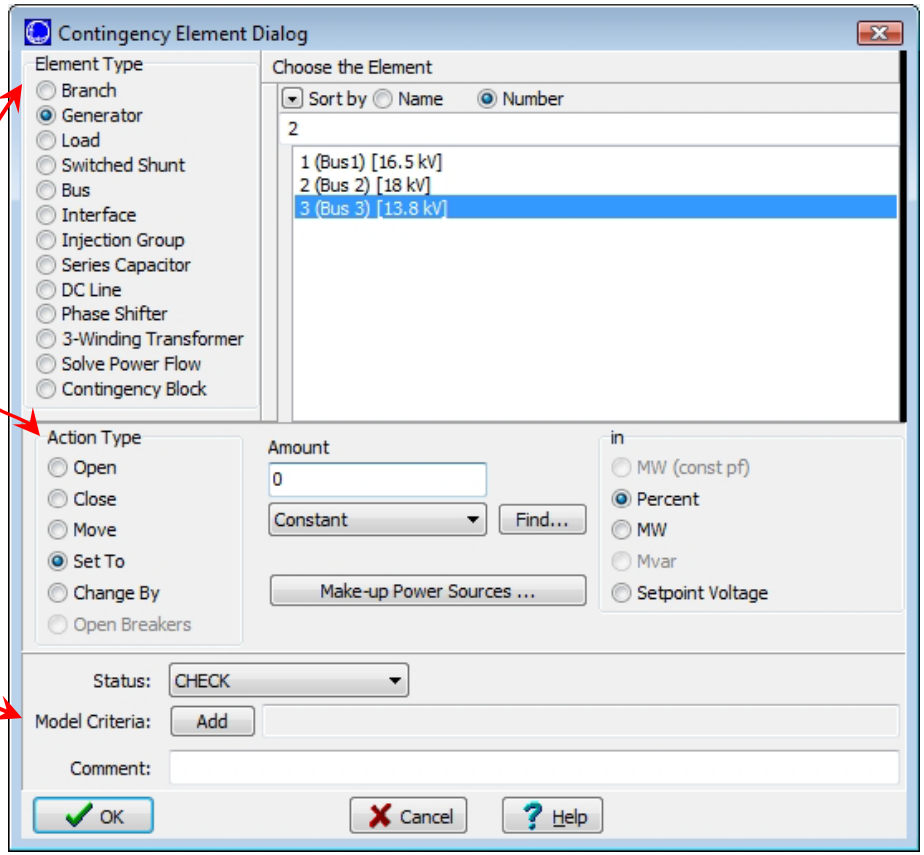

- Very detailed modeling of System Adjustments is possible

N-1-1 Analysis Process

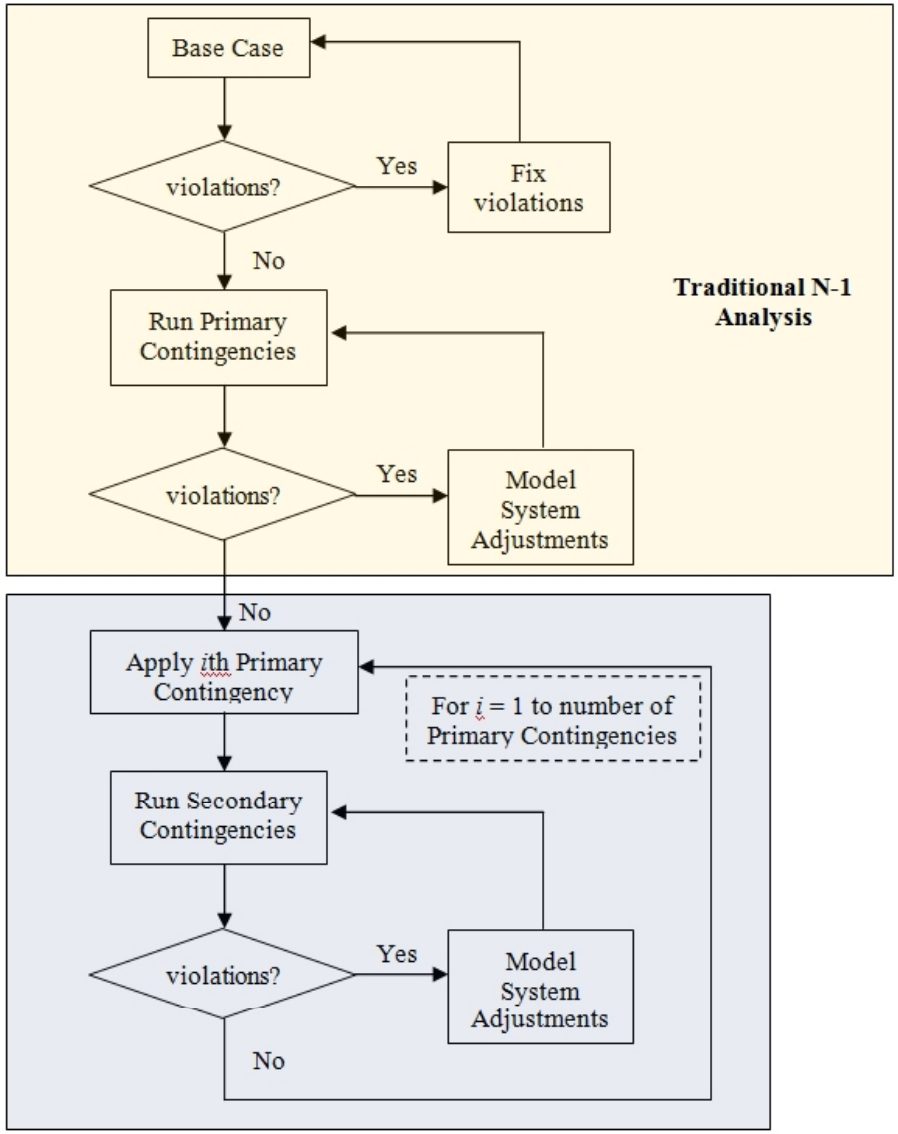

B7 Case:
Normal System Operation

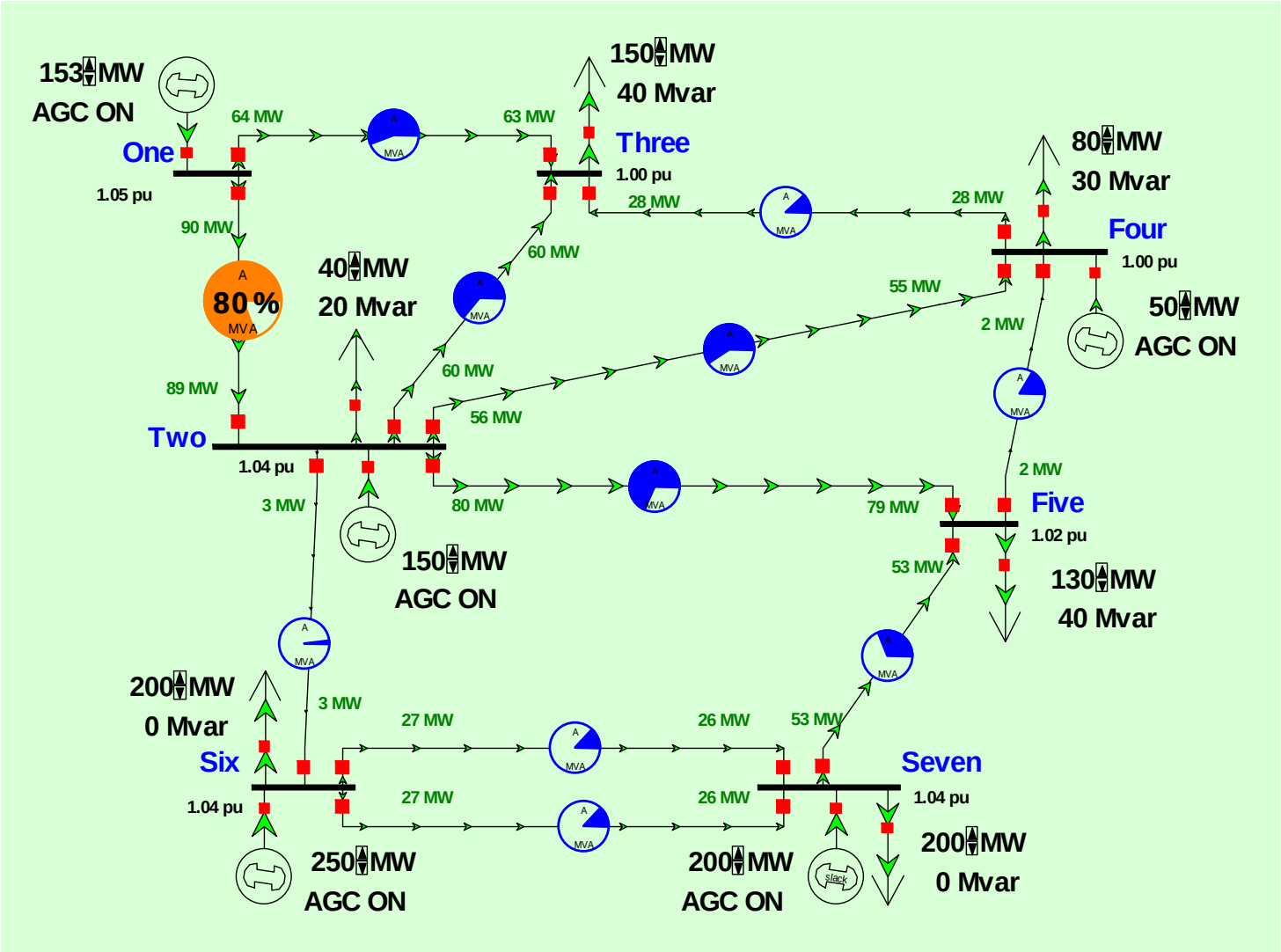

B7 Case: Primary Contingencies

- Without System Adjustments, case has several branch overloads during various Primary Contingencies

	Label	Skip	Processed	Solved	Violations	Max Branch %	Min Volt	Max Volt	Max Interface %
1	Primary: Line 1-2	NO	YES	YES	1	131.1			
2	Primary: Line 1-3	NO	YES	YES	1	128.7			
3	Primary: Line 2-3	NO	YES	YES	0				
4	Primary: Line 2-4	NO	YES	YES	0				
5	Primary: Line 2-5	NO	YES	YES	0				
6	Primary: Line 2-6	NO	YES	YES	0				
7	Primary: Line 3-4	NO	YES	YES	0				
8	Primary: Line 4-5	NO	YES	YES	0				
9	Primary: Line 5-7	NO	YES	YES	1	106.3			
10	Primary: Line 6-7a	NO	YES	YES	0				
11	Primary: Line 6-7b	NO	YES	YES	0				
12	Primary: Gen1	NO	YES	YES	0				
13	Primary: Gen2	NO	YES	YES	1	110.9			
14	Primary: Gen4	NO	YES	YES	0				
15	Primary: Gen6	NO	YES	YES	1	122.5			
16	Primary: Gen7	NO	YES	YES	2	128.2			

System Adjustments

- If effective System Adjustments are known, incorporate them into contingency definitions
- Simulator's tools may be used to help design System Adjustments if they are not known:
  - Sensitivity Analysis
  - Line Loading Replicator
  - OPF: apply to post-contingent system when system adjustments are permitted post-contingency
  - SCOPF: apply to pre-contingent system when system adjustments are not permitted post-contingency

TLR Sensitivities: Single Element

- For contingencies with a single overload, solve contingency of interest
- Use TLR Sensitivities and Custom Expressions to estimate the impact of adjusting generators and loads in relieving the overload

Overloaded Line

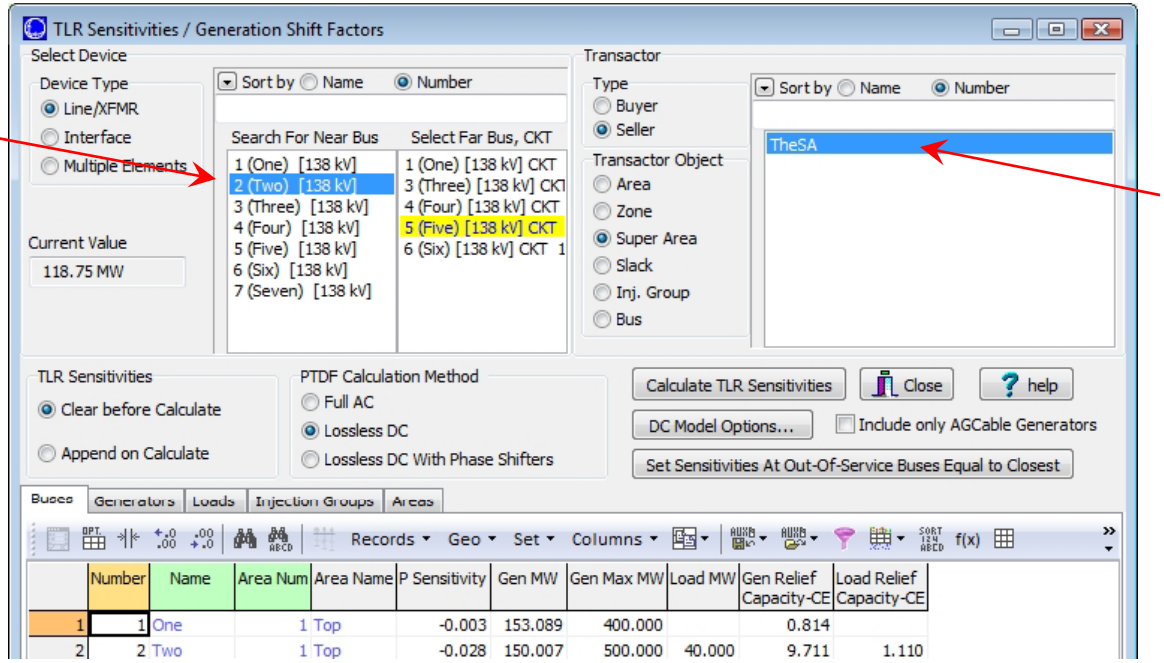

Source of Make-up Power

TLR Sensitivities: Multiple Element

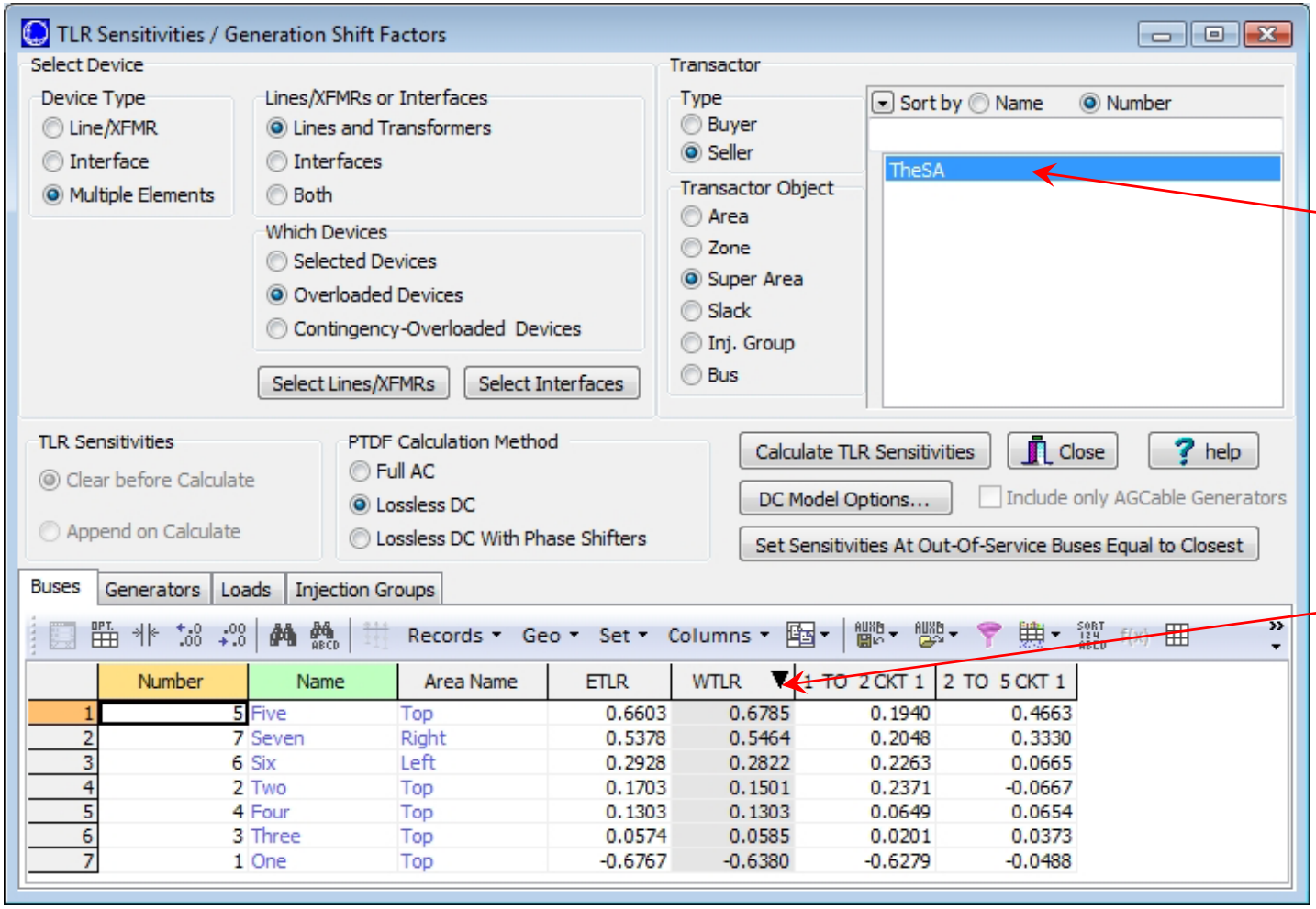

Source of Make-up Power

WTLR shows good locations to change load/generation

Line Loading Replicator

Overloaded line and estimated MW flow to meet MVA limit

Injection group containing all possible System Adjustment controls (gens and/or loads)

Suggested changes for achieving desired loading

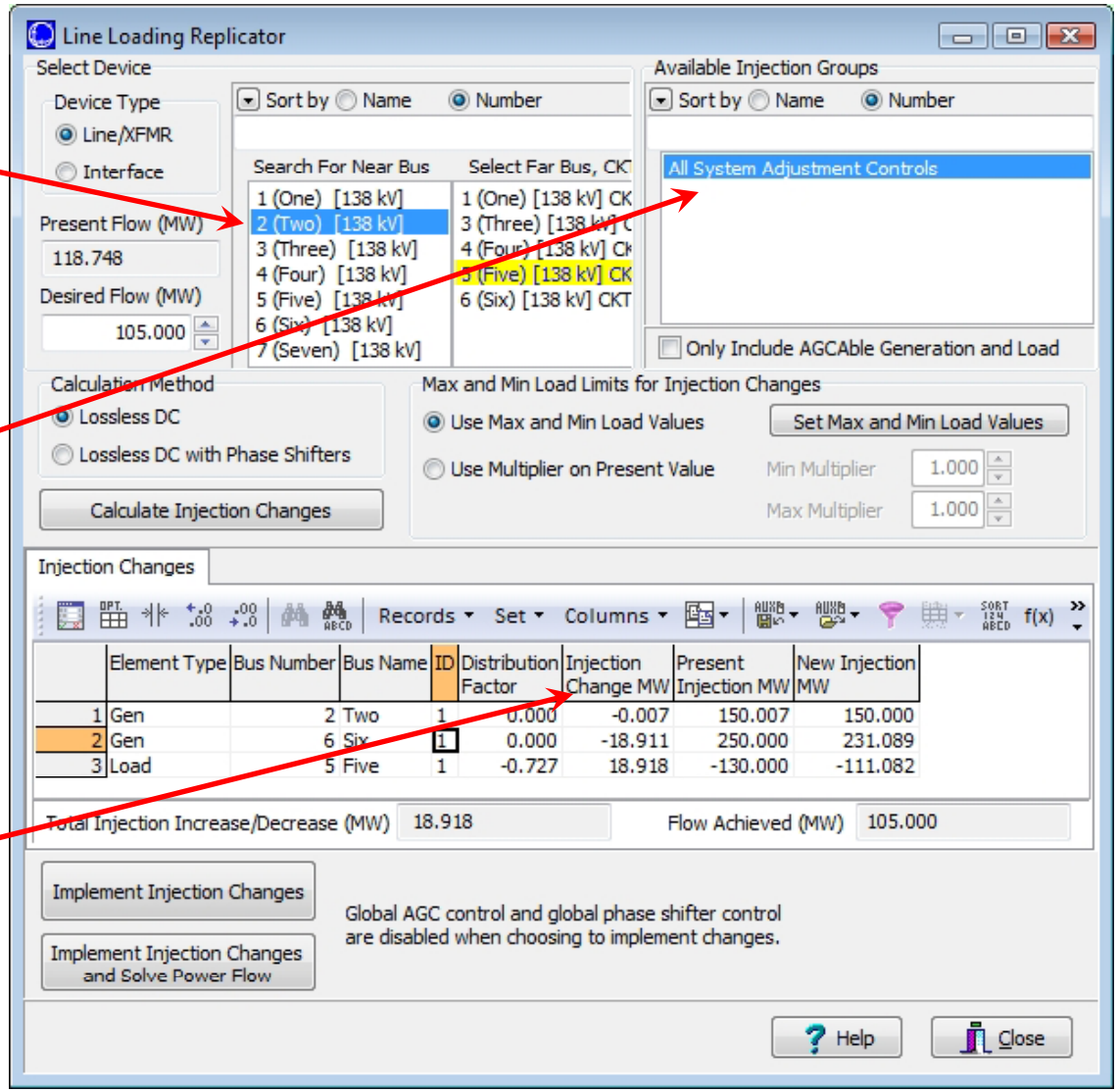

OPF: System Adjustments After Contingency

- Primary Contingency: Loss of Line between buses 5 and 7

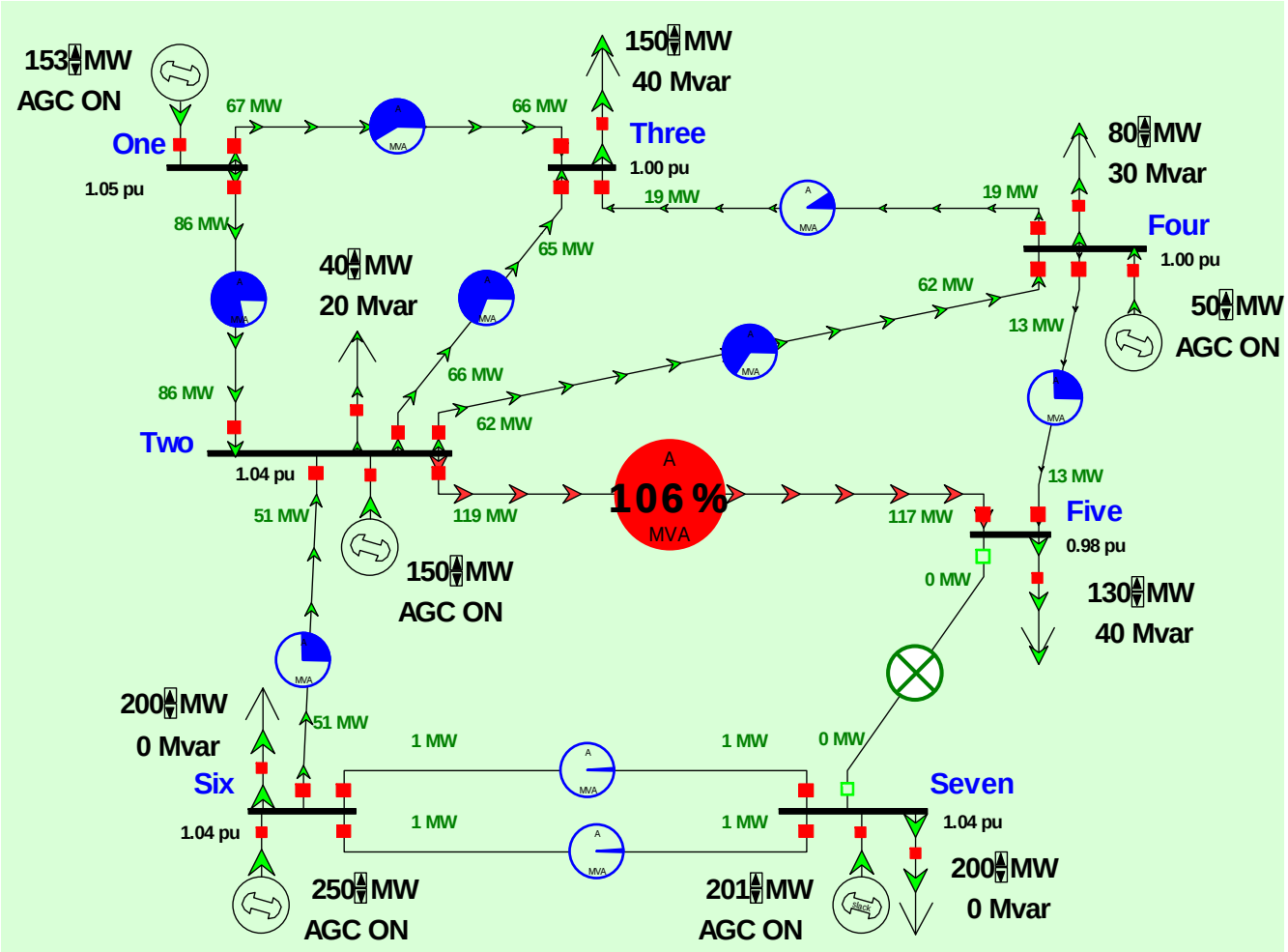

OPF Results

- Drop generator at bus 4, increase generator at bus 6

LP OPF Dialog

Options | Results | LP Solution Details

All LP Variables | LP Basic Variables | LP Basis Matrix | Inverse of LP Basis | Trace Solution

Records Set Columns f(x) Options

	ID	Org. Value	Value	Delta Value	BasicVar	NonBasicVar	Cost(Down)	Cost(Up)	Down Range	Up Range	Reduced Cost Up	Reduced Cost Down	At Breakpoint?
1	Gen 1 #1 MW Control	153.089	153.089	0.000	0	1	-10.00	10.00	153.089	246.911	17.449	-2.551	YES
2	Gen 2 #1 MW Control	150.007	150.000	-0.007	0	3	At Min	-10.00	At Min	0.007	0.000	-19990.000	YES
3	Gen 4 #1 MW Control	50.007	93.236	43.229	2	0	10.00	10.00	43.229	206.764	0.000	0.000	NO
4	Gen 6 #1 MW Control	250.000	206.778	-43.222	1	0	-10.00	-10.00	56.778	43.222	0.000	0.000	NO
5	Gen 7 #1 MW Control	201.106	200.238	-0.868	0	5	-10.00	-10.00	200.238	0.868	0.000	0.000	NO
6	Load 2 #1 MW Control	40.000	40.000	0.000	0	6	-100.00	At Max	5.000	At Max	19990.000	-110.000	YES
7	Load 3 #1 MW Control	150.000	150.000	0.000	0	7	-100.00	At Max	20.000	At Max	20005.710	-94.290	YES
8	Load 4 #1 MW Control	80.000	80.000	0.000	0	8	-100.00	At Max	15.000	At Max	20010.000	-90.000	YES
9	Load 5 #1 MW Control	130.000	130.000	0.000	0	9	-100.00	At Max	20.000	At Max	20078.064	-21.936	YES
10	Load 6 #1 MW Control	200.000	200.000	0.000	0	10	-100.00	At Max	30.000	At Max	19990.000	-110.000	YES
11	Load 7 #1 MW Control	200.000	200.000	0.000	0	11	-100.00	At Max	30.000	At Max	19990.000	-110.000	YES
12	Slack-Superarea TheSA	0.000	0.000	0.000	0	2	At Min	At Max	At Min	At Max	5010.000	-4990.000	YES
13	Slack-Line 2 TO 5 CKT 1	-7.560	0.000	7.560	0	4	At Min	0.00	At Min	120.000	116.877	-883.123	YES

OK | Solve LP OPF | Single Outer Loop | Initialize LP OPF | Save As Aux | Load Aux | Print | Help | Cancel

OPF Results: Difference Flows

Gen drop of 43 MW at bus 6 provides 30 MW relief on overloaded line

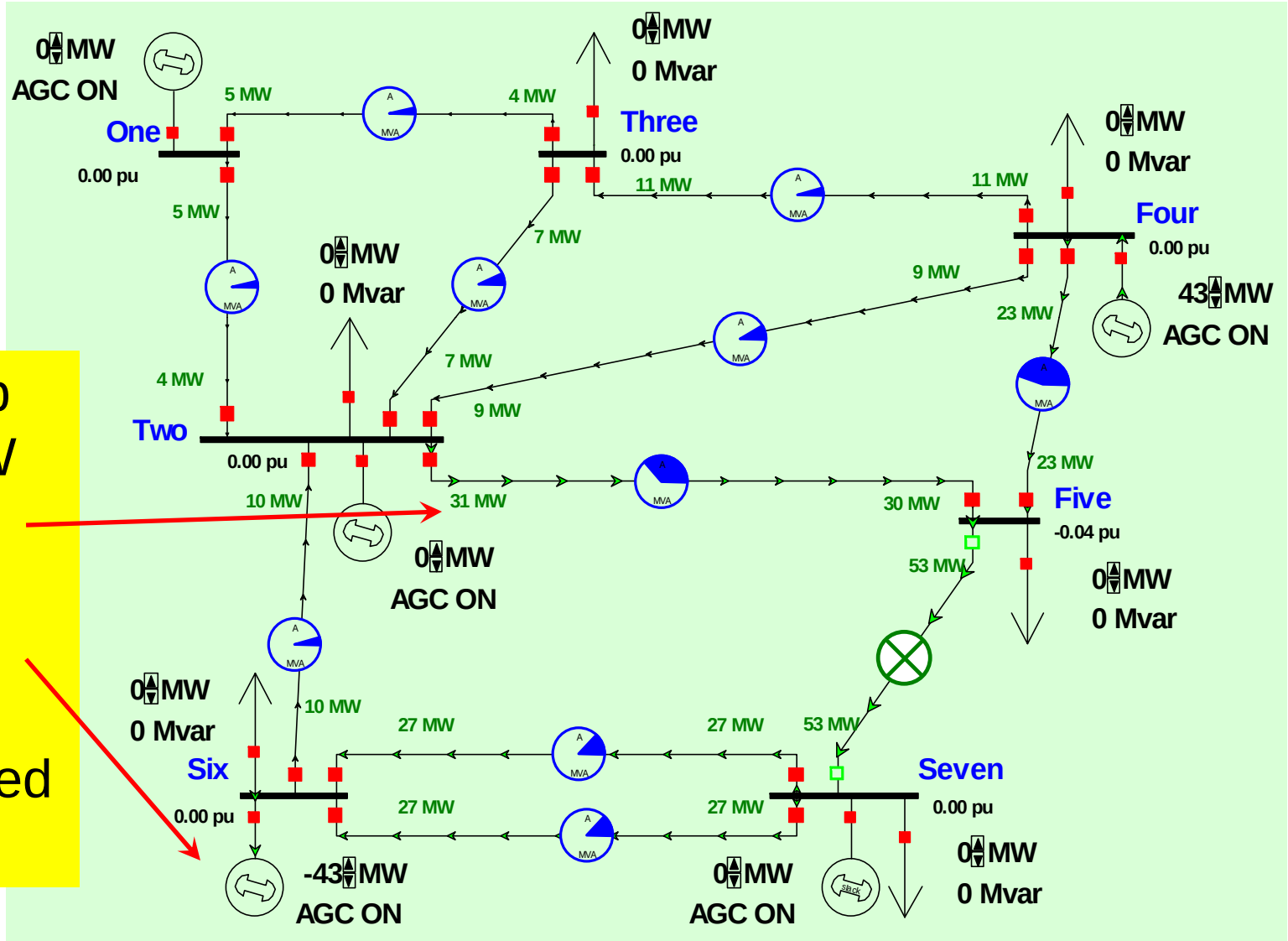

Modeling System Adjustments

- Contingency Block for Remedial Action Scheme
- Block may be applied to multiple contingencies that cause similar overloading on line 2-5
- Optionally assign Model Criteria to block elements or entire block to apply the RAS only at certain loading conditions

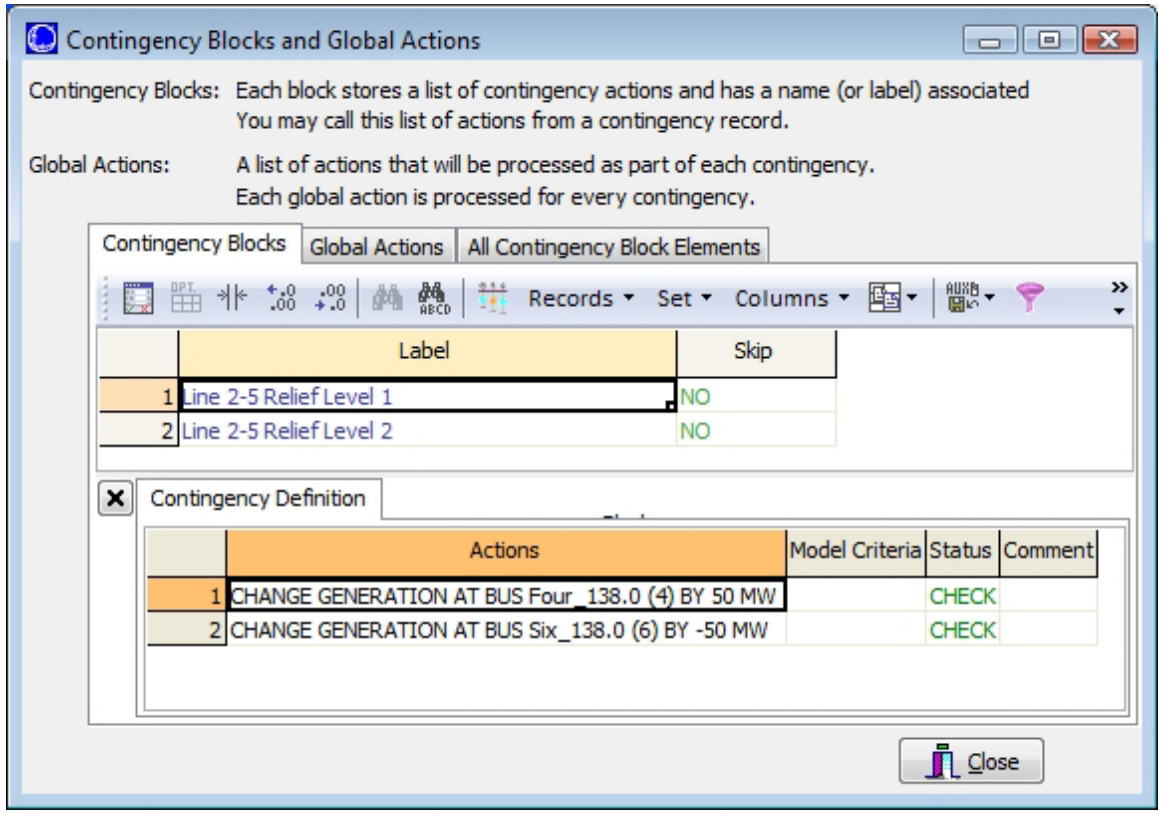

Primary Contingency with System Adjustments

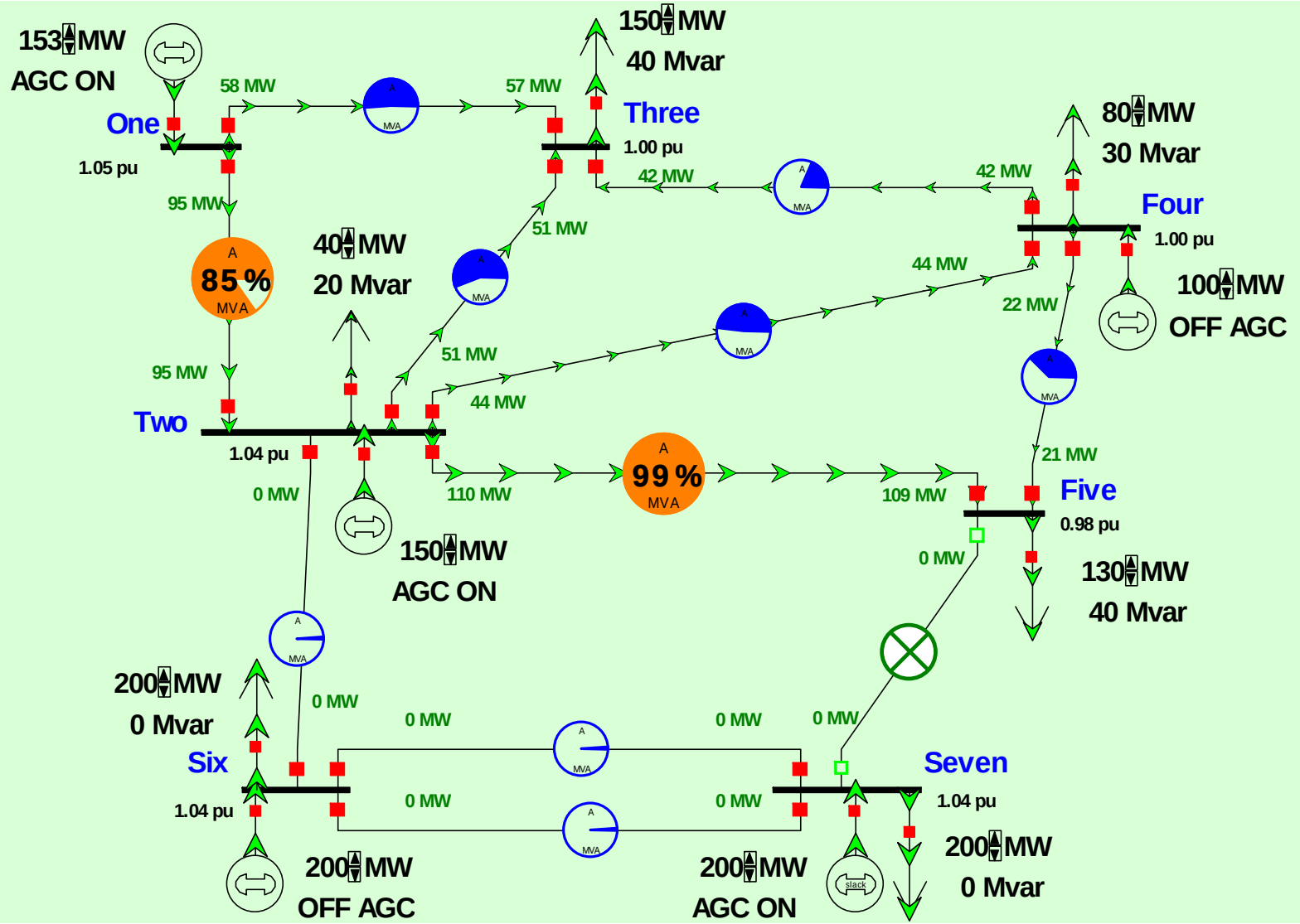

Secondary Contingencies

- Solve a Primary Contingency and set as reference
- Run the contingency analysis on the set of Secondary Contingencies
- Repeat OPF or SCOPF processes for secondary contingencies that result in overloads

Contingencies | Options | Results

Records ▾ Set ▾ Columns ▾

	Label	Skip	Processed	Solved	Violations	Max Branch %	Min Volt	Max Volt	Max Interface %
18	Secondary: Line 1-3	NO	YES	YES	1	107.5			
19	Secondary: Line 2-3	NO	YES	YES	1	108.1			
20	Secondary: Line 2-4	NO	YES	YES	1	109.0			
21	Secondary: Line 2-5	NO	YES	YES	2	294.4	0.761		
22	Secondary: Line 2-6	NO	YES	YES	0				
23	Secondary: Line 3-4	NO	YES	YES	0				
24	Secondary: Line 4-5	NO	YES	YES	1	121.0			
25	Secondary: Line 5-7	NO	YES	YES	0				
26	Secondary: Line 6-7a	NO	YES	YES	0				
27	Secondary: Line 6-7b	NO	YES	YES	0				
28	Secondary: Gen1	NO	YES	YES	1	101.9			
29	Secondary: Gen2	NO	YES	YES	0				
30	Secondary: Gen4	NO	YES	YES	1	116.3			
31	Secondary: Gen6	NO	YES	YES	0				
32	Secondary: Gen7	NO	YES	YES	0				

SCOPF where System Adjustments are not Permitted After Contingency

- SCOPF difference case (relative to Base Case)
- Load must be shed at bus 5 for system to be secure for the secondary contingencies

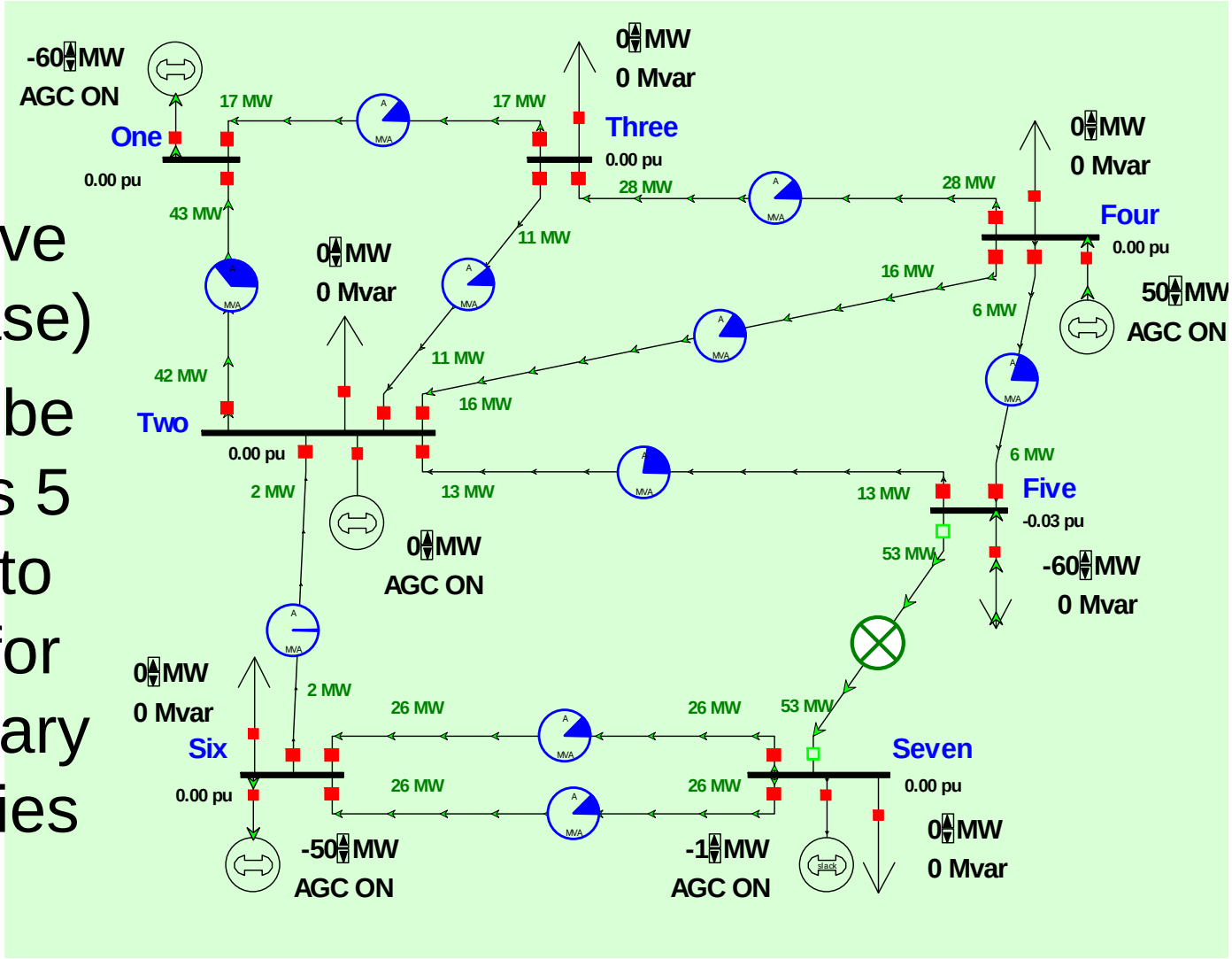

System Adjustments Revised

- Revised RAS to apply to Primary Contingency so that Secondary Contingencies are secure with no further System Adjustments

Contingency Blocks

Records Set Columns

	Label	Skip
1	Line 2-5 Relief Level 1	NO
2	Line 2-5 Relief Level 2	NO
3	ine 2-5 Relief Level 1a	NO

Contingency Definition

	Actions	Model Criteria	Status	Comment
1	CHANGE GENERATION AT BUS Four_138.0 (4) BY 50 MW		CHECK	
2	CHANGE GENERATION AT BUS Six_138.0 (6) BY -50 MW		CHECK	
3	CHANGE LOAD AT BUS Five_138.0 (5) BY -60 MW (cnst pf)		CHECK	
4	CHANGE GENERATION AT BUS One_138.0 (1) BY -60 MW		CHECK	

Generator and Load Models

- Use OPF with Minimum Control Change objective function to assign uniform cost per MW to adjust any OPF control
- However, it may be desirable to assign a higher cost to load controls than to generation controls
  - In this way, load shedding may also be considered, but would only be applied if generator actions are ineffective or extreme
  - Use OPF with Minimum Cost objective function, and assign “V-shaped” marginal cost curves to generators and appropriate benefit curves to loads

Generator Cost Curve

- Slope of curve is “cost” to adjust generator output by 1 MW
- Set breakpoint to the current operating point
- Easy to implement with Auxiliary File

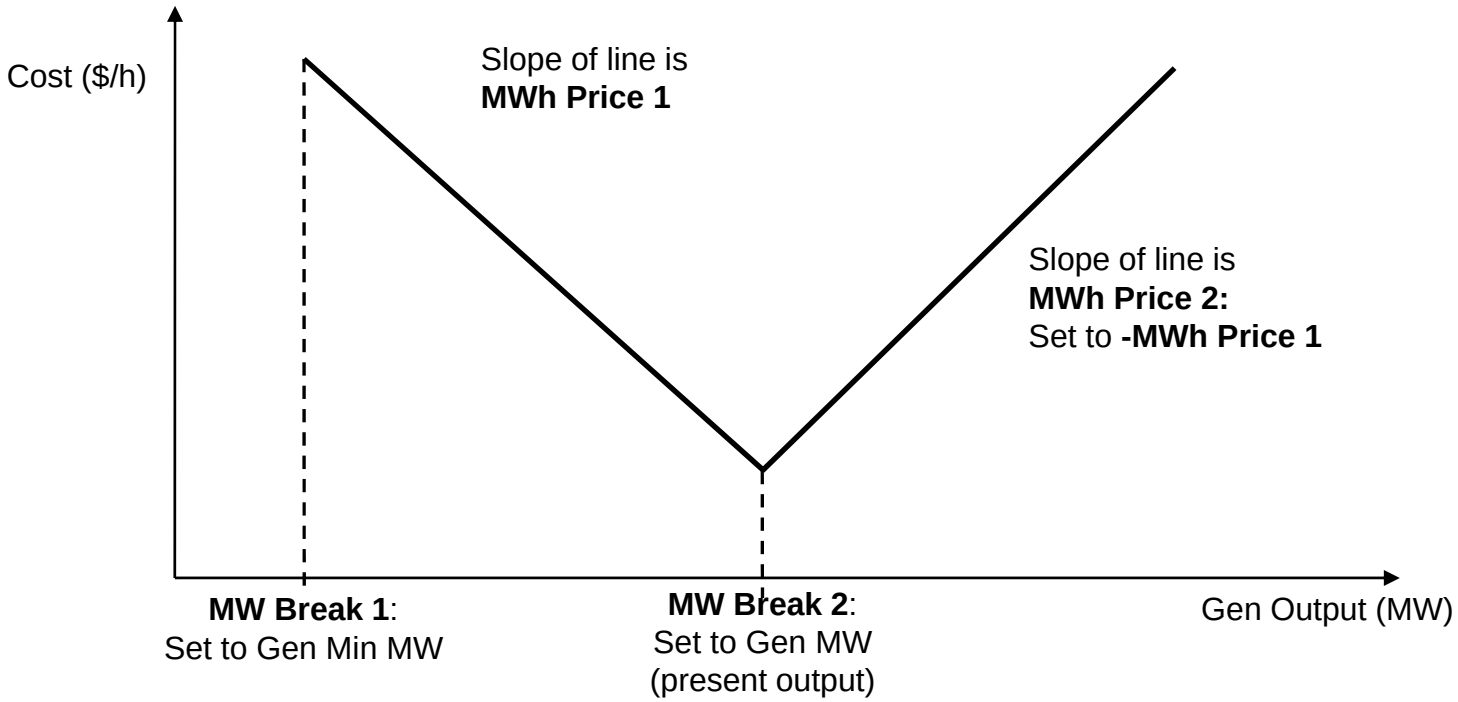

Generator Cost Curve Auxiliary File

- Cost to move all generators is set to $10 per MW

```
// assign all generators a cost of $10/MWh to deviate from their
present outputs

SCRIPT
{
SelectAll(GEN);
SetData(GEN, [GenBidMW, GenBidMWHR, GenBidMW:1, GenBidMWHR:1],
        ["@GenMWMin", -10, "@GenMW", 10], Selected);
UnSelectAll(GEN);
}
```

Load Benefit Models

Load Linear Benefit Models | Buses

Records Geo Set Columns f(x) Options

Filter Advanced Load Find... Remove

	Number of Bus	Name of Bus	ID	Status	AGC	MW	Min MW	Max MW	Fixed Benefit	Benefit Model	MW Break 1	MWh Price 1	MW Break 2	MWh Price 2	MW Break 3	MWh Price 3	MW Break 4	MWh Price 4
1	2	Two	1	Closed	YES	40.00	0.00	40.00	0.00	Piecewise Linear	0.00	800.00	20.00	500.00	35.00	100.00	40.00	0.00
2	3	Three	1	Closed	YES	150.00	0.00	150.00	0.00	Piecewise Linear	0.00	800.00	75.00	500.00	130.00	100.00	150.00	0.00
3	4	Four	1	Closed	YES	80.00	0.00	80.00	0.00	Piecewise Linear	0.00	800.00	40.00	500.00	65.00	100.00	80.00	0.00
4	5	Five	1	Closed	YES	70.00	0.00	130.00	0.00	Piecewise Linear	0.00	800.00	65.00	500.00	110.00	100.00	130.00	0.00
5	6	Six	1	Closed	YES	200.00	0.00	200.00	0.00	Piecewise Linear	0.00	800.00	100.00	500.00	170.00	100.00	200.00	0.00
6	7	Seven	1	Closed	YES	200.00	0.00	200.00	0.00	Piecewise Linear	0.00	800.00	100.00	500.00	170.00	100.00	200.00	0.00

Search Search Now Options

- Maximum load is set to nominal value
- Load benefit is much higher than cost to redispatch generation

Combining Two Lists of Contingencies

- Use “Join Active Contingencies” feature to combine list of primary and secondary contingencies into a complete N-1-1 set

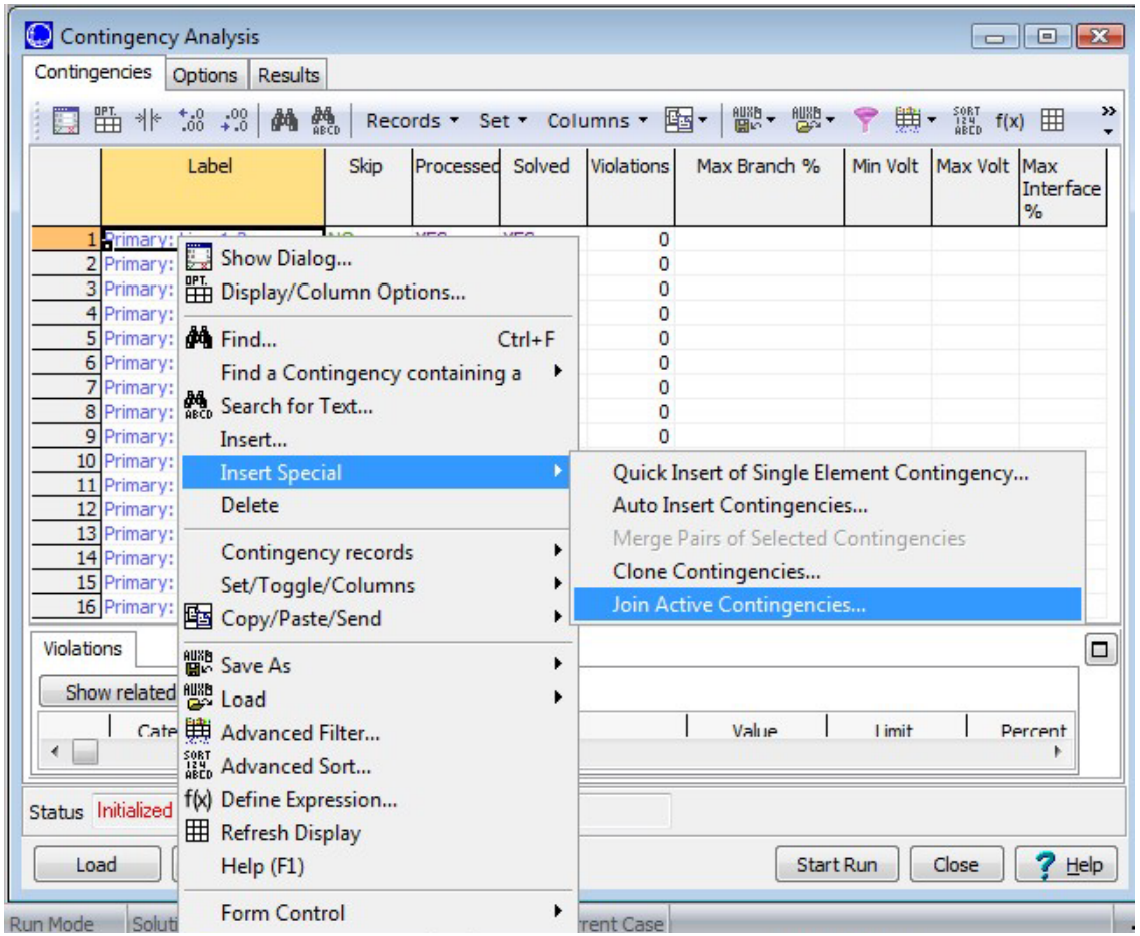

More Information

- White paper and sample power flow case and contingencies
  - http://www.powerworld.com/Resources/TransmissionPlanning.asp